UVX-DP-TP-100M

BLACK BOX

4K DisplayPort over HDBaseT Extender

Distributes uncompressed 4K @30 Hz UHD video, audio, power, RS-232, and USB 2.0 up to 330 feet (100 m) over a single CAT6a/7 cable.



Contact Information

Order toll-free in the U.S. or for FREE 24/7 technical support:
Call 877-877-BBOX (outside U.S. call 724-746-5500)
www.blackbox.com • info@blackbox.com

FEDERAL COMMUNICATIONS COMMISSION AND INDUSTRY CANADA RADIO FREQUENCY INTERFERENCE STATEMENTS

This equipment generates, uses, and can radiate radio-frequency energy, and if not installed and used properly, that is, in strict accordance with the manufacturer's instructions, may cause interference to radio communication. It has been tested and found to comply with the limits for a Class A computing device in accordance with the specifications in Subpart B of Part 15 of FCC rules, which are designed to provide reasonable protection against such interference when the equipment is operated in a commercial environment. Operation of this equipment in a residential area is likely to cause interference, in which case the user at his own expense will be required to take whatever measures may be necessary to correct the interference.

Changes or modifications not expressly approved by the party responsible for compliance could void the user's authority to operate the equipment.

This digital apparatus does not exceed the Class A limits for radio noise emission from digital apparatus set out in the Radio Interference Regulation of Industry Canada.

Le présent appareil numérique n'émet pas de bruits radioélectriques dépassant les limites applicables aux appareils numériques de classe A prescrites dans le Règlement sur le brouillage radioélectrique publié par Industrie Canada.

Normas Oficiales Mexicanas (NOM) Electrical Safety Statement INSTRUCCIONES DE SEGURIDAD

1. Todas las instrucciones de seguridad y operación deberán ser leídas antes de que el aparato eléctrico sea operado.
2. Las instrucciones de seguridad y operación deberán ser guardadas para referencia futura.
3. Todas las advertencias en el aparato eléctrico y en sus instrucciones de operación deben ser respetadas.
4. Todas las instrucciones de operación y uso deben ser seguidas.

5. El aparato eléctrico no deberá ser usado cerca del agua—por ejemplo, cerca
de la tina de baño, lavabo, sótano mojado o cerca de una alberca, etc.

6. El aparato eléctrico debe ser usado únicamente con carritos o pedestales que sean recomendados por el fabricante.

7. El aparato eléctrico debe ser montado a la pared o al techo sólo como sea recomendado por el fabricante.

8. Servicio—El usuario no debe intentar dar servicio al equipo eléctrico más allá a lo descrito en las instrucciones de operación. Todo otro servicio deberá ser referido a personal de servicio calificado.

9. El aparato eléctrico debe ser situado de tal manera que su posición no interfiera su uso. La colocación del aparato eléctrico sobre una cama, sofá, alfombra o superficie similar puede bloquea la ventilación, no se debe colocar en libreros o gabinetes que impidan el flujo de aire por los orificios de ventilación.

10. El equipo eléctrico deber ser situado fuera del alcance de fuentes de calor como radiadores, registros de calor, estufas u otros aparatos (incluyendo amplificadores) que producen calor.

11. El aparato eléctrico deberá ser connectado a una fuente de poder sólo del tipo descrito en el instructivo de operación, o como se indique en el aparato.

12. Precaución debe ser tomada de tal manera que la tierra fisica y la polarización del equipo no sea eliminada.

13. Los cables de la fuente de poder deben ser guiados de tal manera que no sean pisados ni pellizcados por objetos colocados sobre o contra ellos, poniendo particular atención a los contactos y receptáculos donde salen del aparato.

14. El equipo eléctrico debe ser limpiado únicamente de acuerdo a las recomendaciones del fabricante.

15. En caso de existir, una antena externa deberá ser localizada lejos de las lineas de energia.

16. El cable de corriente deberá ser desconectado del cuando el equipo no sea usado por un largo periodo de tiempo.

17. Cuidado debe ser tomado de tal manera que objectos liquidos no sean derramados sobre la cubierta u orificios de ventilación.

18. Servicio por personal calificado deberá ser provisto cuando:

A: El cable de poder o el contacto ha sido dañado; u

B: Objectos han caído o líquido ha sido derramado dentro del aparato; o

C: El aparato ha sido expuesto a la lluvia; o

D: El aparato parece no operar normalmente o muestra un cambio en su desempeño; o

E: El aparato ha sido tirado o su cubierta ha sido dañada.

TRADEMARKS USED IN THIS MANUAL

Black Box and the Double Diamond logo are registered trademarks of BB Technologies, Inc.

Blu-ray™ is a trademark of Blu-ray Disc Association.

Any other trademarks mentioned in this manual are acknowledged to be the property of the trademark owners.

Important Safety Instructions

1. Do not expose this apparatus to rain, moisture, dripping or splashing water and do not place objects filled with liquids, such as vases, on the apparatus.
2. Do not install or place this unit in a bookcase, built-in cabinet or in another confined space. Make sure the unit is well ventilated.
3. To prevent risk of electric shock or fire hazard caused by overheating, do not obstruct the unit's ventilation openings with newspapers, tablecloths, curtains, and similar items.
4. Do not install near any heat sources such as radiators, heat registers, stoves, or other apparatus (including amplifiers) that produce heat.
5. Do not place sources of flames, such as lighted candles, on the unit.
6. Clean this apparatus only with a dry cloth.
7. Unplug this apparatus during lightning storms or when unused for long periods of time.
8. Protect the power cord from being walked on or pinched particularly at plugs.
9. Only use attachments/accessories specified by the manufacturer.
10. Refer all servicing to qualified service personnel.

Disclaimer

Black Box Network Services shall not be liable for damages of any kind, including, but not limited to, punitive, consequential or cost of cover damages, resulting from any errors in the product information or specifications set forth in this document and Black Box Network Services may revise this document at any time without notice.

Table of Contents

1. Specifications 7
2. Overview 9
   2.1 Introduction 9
   2.2 Features 9
   2.3 What's Included 10
   2.4 Hardware Description 10
3. Connection and Installation 12

1. Specifications

Transmitter	
Connectors	(1) 12-VDC barrel connector, (1) HDBaseT OUT, (1) 3-pin Phoenix connector, (1) DisplayPort IN, (1) Audio IN, (1) Audio OUT, (1) USB Type B host connector
Input Resolution Support	Up to 3840 x 2160 @30 Hz (UHD)
Maximum Data Rate	10.2 Gbps
Maximum Distance	Via CAT6a/7 cables: Up to 328 feet (100 m) at 3840 x 2160 @30 Hz, 4:2:0, or 1080p @60 Hz output resolution; Via CAT5e/6 cables: Up to 224 feet (70 m) at 3840 x 2160 @30 Hz; Up to 328 feet (100 m) at 1080p @30 Hz resolution
Receiver	
Connectors	(1) 12-VDC barrel connector, (1) HDBaseT IN, (1) 3-pin Phoenix connector, (1) DisplayPort OUT, (1) Audio IN, (1) Audio OUT, (2) USB Type A device connectors
Output Resolution Support	UHD30: 3840 x 2160 @30 Hz; FHD: 1920 x 1080 @60 Hz; HD: 1280 x 720 @60 Hz; WUXGA: 1920 x 1200 @60 Hz; WXGA: 1280 x 800 @60 Hz

1. Specifications (continued)

Receiver (continued)	
Maximum Distance	Via CAT6a/7 cables: Up to 328 feet (100 m) at 3840 x 2160 @30 Hz, 4:2:0, or 1080p @60 Hz output resolution; Via CAT5e/6 cables: Up to 224 feet (70 m) at 3840 x 2160 @30 Hz; Up to 328 feet (100 m) at 1080p @30 Hz resolution
General (Transmitter and Receiver)	
ESD Protection	Human-body model: ±8 kV (air-gap discharge)/ ±4 kV (contact discharge)
Operating Temperature	32 to 113° F (0 to 45° C)
Storage Temperature	-4 to +158° F (-20 to +70° C)
Humidity	10 to 90%, noncondensing
Power Input	100–240 VAC, 50/60 Hz, 1.5 A
Input Connector Type	IEC320, C14
Power Output	Each unit: (1) 12-VDC, 2-A power supply
Consumption	14.2 W (max.)
Power Supply Cord Length	6 ft. (1.8 m)
Dimensions	Each unit: 0.99"H x 7.91"W x 3.95"D (2.51 x 20.09 x 10.03 cm)
Weight	Each unit: 1.1 lb. (0.5 kg)

2. Overview

2.1 Introduction

The UVX-DP-TP-100M is a 4K DisplayPort over HDBaseT Extender with USB 2.0 and audio passthrough. It distributes uncompressed 4K @30 Hz UHD video, audio, power, RS-232, and USB 2.0 together up to 330 feet (100 m) over a single CAT6a/7 cable. The extender has a transmitter unit and a receiver unit.

With USB 2.0 passthrough, the extender enables users to control or monitor a remote server from a harsh environment, or operate a physically inaccessible PC, server, or workstation remotely. Bidirectional audio passthrough enables audio distribution in both directions.

The extender units have 48 V PoH and only need one power supply at the transmitter end to power both transmitter and receiver units. Secure the transmitter's 12 V power supply with a screw-in connector to prevent the power from being accidentally disconnected. Power LEDs on both units light when power is applied to the unit. Signal status LEDs show connections between devices.

2.2 Features

- Via CAT6a/7 cables, the extenders support 4K @30 Hz up to 330 feet (100 meters) and 1080p @60 Hz up to 330 feet (100 meters).
- Via CAT5e/6 cables, the extenders support 4K x 2K @30 Hz output up to 224 feet (70 meters).
- Supports DisplayPort 1.2 up to 4K @30 Hz.
- Provides USB 2.0 passthorugh over HDBaseT, with USB-HOST built-in TX and USB-DEVICE built-in RX.
- Supports bidirectional stereo line audio passthrough over HDBaseT.
- Provides RS-232 and EDID passthrough over HDBaseT
- All connectors are on one side of each unit for easy installation.

2.3 What's Included

Your package should include the following items. If anything is missing or damaged, contact Black Box Technical Support at 877-877-2269 or info@blackbox.com.

- (1) DisplayPort Extender Transmitter
- (1) DisplayPort Extender Receiver
- (1) 12-VDC, 2-A power supply with US, EU, UK, and AU power clips
- (2) 3.5-mm, 2-pin male Phoenix connectors

- (2) mounting brackets
- This user manual

2.4 Hardware Description

Figures 2-1 and 2-2 show the front and back panels of the receiver. Tables 2-1 and 2-2 describe their components.

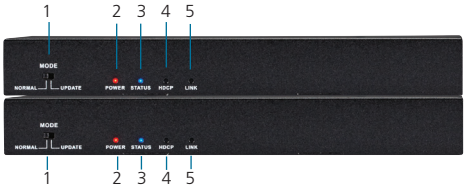

Figure 2-1. Receiver and Transmitter front panels.

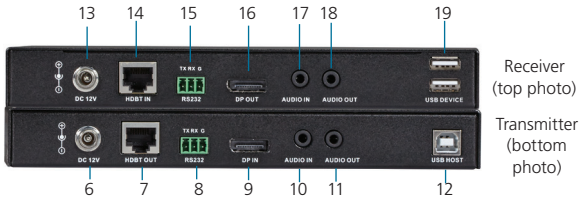

Figure 2-2. Receiver and Transmitter back panels.

Table 2-1. Transmitter front- and back-panel components.

Number	Component	Description
1	Mode	Switches the Mode for the RS-232 port. Normal: RS-232 HDBaseT passthrough. Update: RS-232 firmware update.
2	Power LED	ON: The transmitter is powered on. OFF: The transmitter is powered off.
3	Status LED	Blinking: The transmitter is working properly. OFF: The transmitter is not working properly.
4	HDCP LED	ON: HDCP video is being transmitted. Flashing quickly: Non-HDCP video is being transmitted. OFF: No audio and video signal.
5	Link LED	ON: HDBaseT link is normal. OFF/Blinking: No HDBaseT link.
6	Barrel connector.	12-VDC power input
7	HDBaseT OUT	Connects to HDBaseT IN port of receiver
8	3-pin Phoenix connector	RS-232 passthrough or firmware update
9	DP IN	Connects to a DisplayPort source
10	Audio IN	Connects to an audio source such as a PC
11	Audio OUT	Connects to an audio device such as an amplifier.
12	USB Type B connector	Connects to a device to be controlled, such as a server, computer, etc.

Table 2-2. Receiver front- and back-panel components.

Number	Component	Description
1	Mode	Switches the Mode for the RS-232 port. Normal: RS-232 HDBaseT passthrough. Update: RS-232 firmware update.
2	Power LED	ON: The receiver is powered on. OFF: The receiver is powered off.
3	Status LED	Blinking: The receiver is working properly. OFF: The receiver is not working properly.
4	HDCP LED	ON: HDCP video is being received. Flashing quickly: Non-HDCP video is being received. OFF: No audio and video signal.
5	Link LED	ON: HDBaseT link is normal. OFF/Blinking: No HDBaseT link.
13	Barrel connector.	12-VDC power input
14	HDBT IN	Connects to HDBaseT OUT port of HDBaseT transmitter.
15	3-pin Phoenix connector	RS-232 passthrough or firmware update
16	DP OUT	Connects to a DisplayPort display device
17	Audio IN	Connects to an audio source such as a PC
18	Audio OUT	Connects to an audio device such as an earphone.
19	(2) USB Type A connectors	Connect to USB devices (mouse, keyboard, USB disk, etc.)

3. Connection and Installation

1. Using quality DisplayPort cables, connect a DisplayPort source (Blu-ray™, games console, satellite/cable TV, media server, etc.) to the DisplayPort IN port of the transmitter.

NOTE: Make sure that the source and display are 4K compatible if you are attempting to transmit an Ultra HD signal—check that all devices are correctly configured for input/output compatibility.

2. Connect a good quality, well-terminated CAT5e or higher cable between the HDBaseT OUT of the transmitter to the HDBaseT IN of the receiver.

NOTE: The maximum transmission distances for the extenders are 230 feet (70 meters) with CAT5e/CAT6 or 328 feet (100 meters) with CAT6a/CAT7. This value applies to perfect transmission conditions—including straight cable runs with no electrical interference, bends, kinks, patch panels, or wall outlets.

If any of the above is a factor in your installation, transmission range may be affected—avoid this where possible.

3. Connect the DisplayPort display device (LED/LCD display or projector) to the DP OUT of the receiver.

NOTE: We strongly recommend using the supplied mounting brackets to secure the receiver to a flat surface behind/near the display device. Sudden movement of these devices could lead to loss of picture/sound if connections loosen or strain, resulting in unnecessary service call-backs.

4. Connect the included 12-VDC power supply to the transmitter and power it on. The PoH function carries power along the length of the cable one way to power the receiver. No additional power supply is required at the display end of the cable run.

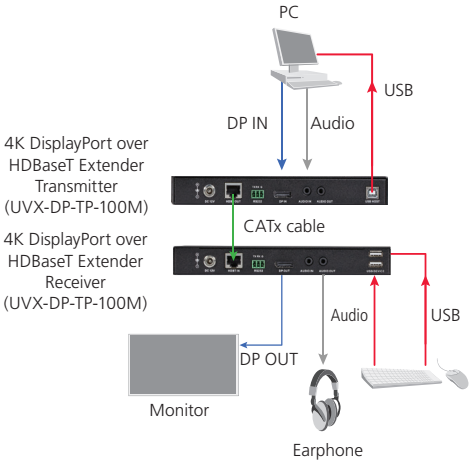

Figure 3-1. Installation diagram.

Black Box Tech Support: FREE! Live. 24/7.



Great tech support is just 60 seconds away
at 877-877-2269 or blackbox.com.

About Black Box

Black Box provides an extensive range of networking and infrastructure products. You'll find everything from cabinets and racks and power and surge protection products to media converters and Ethernet switches all supported by free, live 24/7 Tech support available in 60 seconds or less.

© Copyright 2016. Black Box Corporation. All rights reserved. Black Box® and the Double Diamond logo are registered trademarks of BB Technologies, Inc. Any third-party trademarks appearing in this white paper are acknowledged to be the property of their respective owners.

uvx-dp-tp-100m_user_rev1