Installation Instructions

Original Instructions

PowerFlex 750-Series Option Modules

These instructions cover the installation of the option modules that are listed in the following graphic. For wiring and jumper settings for these modules, see the PowerFlex® 750-Series I/O, Feedback, and Power Option Modules Installation Instructions, publication 750-IN111. For information on access to the drive control pod and how to install network communication option modules, see the publications that are listed in Additional Resources.

IMPORTANT Only one safety option module can be installed at a time. Simultaneous safety option installations are not supported.

Compatible Ports

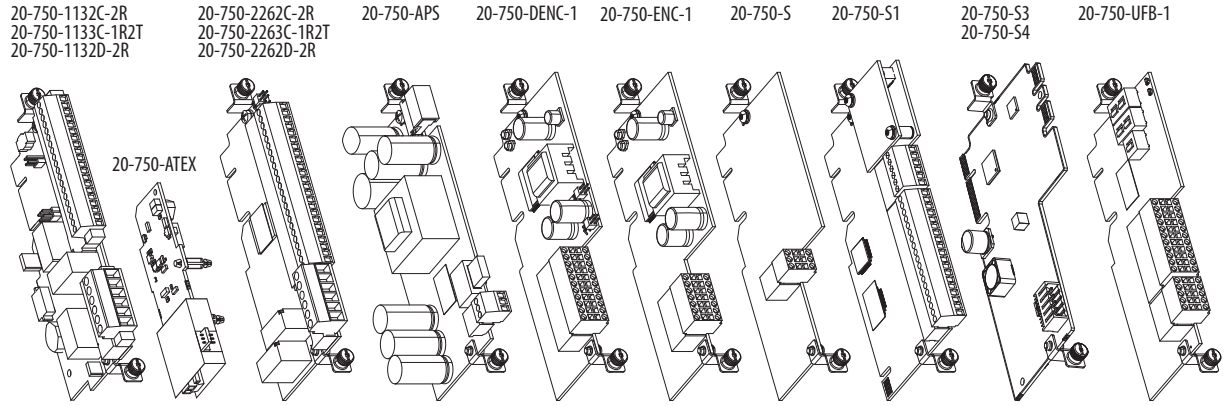

Option Module Cat. No. 20-750-	PowerFlex 753 Drives						PowerFlex 755 Drives								PowerFlex 755T Drives				
	Frame 1 Ports			Frame 2…7 Ports			Frame 1 Ports			Frame 2…10 Ports					Frame 5…15 Ports				
	6	5	4	6	5	4	6	5	4	8	7	6	5	4	8	7	6	5	4
1132C-2R, 1133C-1R2T, 1132D-2R	**No**	Yes	Yes	Yes	Yes	Yes	**No**	Yes	Yes	Yes	Yes	Yes	Yes	Yes	Yes	Yes	Yes	Yes	Yes
1132C-2R, 1133C-1R2T, 1132D-2R with 20-750-ATEX installed(1)	**No**	Yes	Yes	**No**	Yes	Yes	**No**	Yes	Yes	**No**	**No**	**No**	Yes	Yes	**No**	**No**	**No**	Yes	Yes
2262C-2R, 2263C-1R2T, 2262D-2R	**No**	Yes	Yes	Yes	Yes	Yes	**No**	Yes	Yes	Yes	Yes	Yes	Yes	Yes	Yes	Yes	Yes	Yes	Yes
APS	See Page 3			See Page 3			See Page 3			**Yes**	**No**	**No**	**No**	**No**	**Yes**	**No**	**No**	**No**	**No**
DENC-1(2)	**No**	Yes	Yes	Yes	Yes	Yes	**No**	Yes	Yes	**No**	**No**	Yes	Yes	Yes	**No**	**No**	Yes	Yes	Yes
ENC-1	**No**	Yes	Yes	Yes	Yes	Yes	**No**	Yes	Yes	Yes	Yes	Yes	Yes	Yes	Yes	Yes	Yes	Yes	Yes
S	Yes	Yes	Yes	Yes	Yes	Yes	Yes	Yes	Yes	Yes	Yes	Yes	Yes	Yes	Yes	Yes	Yes	Yes	Yes
S1(2)	Yes	Yes	Yes	Yes	Yes	Yes	Yes	Yes	Yes	**No**	**No**	Yes	Yes	Yes	**No**	**No**	Yes	Yes	Yes
S3/S4(2)(3)	Not Supported						Yes	Yes	Yes	**No**	**No**	Yes	Yes	Yes	**No**	**No**	Yes	Yes	Yes
UFB-1	Not Supported						**No**	Yes	Yes	**No**	**No**	Yes	Yes	Yes	**No**	**No**	Yes	Yes	Yes

(1) For detailed instructions on installation of 11-Series I/O with the ATEX option module, see the PowerFlex 750-Series ATEX User Manual, publication 750-UM003.
(2) See Using Option Modules 20-750-S1 / 20-750-S4 with Option Modules 20-750-DENC-1 / 20-750-UFB-1.
(3) Must be installed in port 6 for integrated motion.

Option Module Installation

ATTENTION:

- Electric shock hazard. Verify that all sources of AC and DC power are de-energized and locked out or tagged out in accordance with the requirements of ANSI/NFPA 70E, Part II.
- To avoid an electric shock hazard, verify that the voltage on the bus capacitors has discharged before performing any work on the drive. Measure the DC bus voltage at the +DC and -DC terminals or test points. The voltage must be zero.

For the location of the terminal block and test point sockets, see the manual for your drive:

- PowerFlex 750-Series AC Drives Installation Instructions, publication 750-IN001.
- PowerFlex 750-Series Products with TotalFORCE® Control Installation Instructions, publication 750-IN100.
- PowerFlex 755TM IP00 Open Type Kits Installation Instructions, publication 750-IN101.
- In Safe Torque Off mode, hazardous voltages may still be present at the motor. To avoid an electric shock hazard, disconnect power to the motor and verify that the voltage is zero before performing any work on the motor.

To install an option module, follow these steps.

1. Press the module edge connector firmly into the desired port.
2. Tighten the top and bottom retaining screws.
   a. Recommended torque = 0.45 N•m (4.0 lb•in)
   b. Recommended screwdriver = T15 Hexalobular

IMPORTANT Do not overtighten the retaining screws.

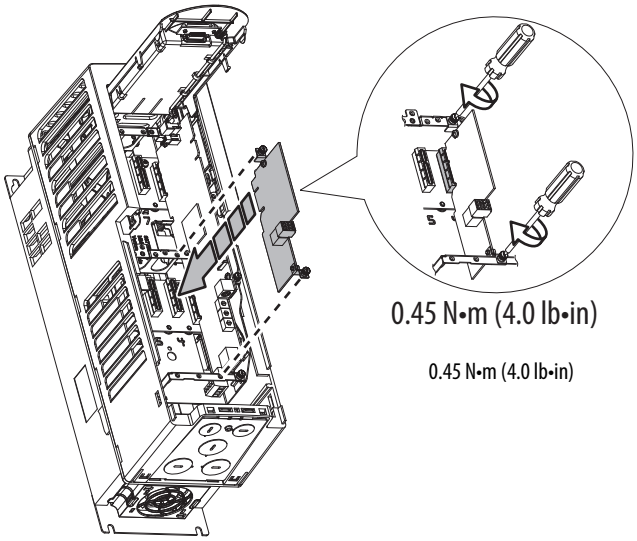

Using Option Modules 20-750-S1 / 20-750-S4 with Option Modules 20-750-DENC-1 / 20-750-UFB-1

IMPORTANT When a Safe Speed Monitor option module (catalog number 20-750-S1), or a PowerFlex 755/755T Integrated Safety Functions option module (catalog number 20-750-S4), is used with a Dual Incremental Encoder option module (catalog number 20-750-DENC-1), or a Universal Feedback Encoder option module (catalog number 20-750-UFB-1), you must install both modules on the same backplane (ports 6, 5, 4).

Only the 20-750-S1 and the 20-750-DENC-1 are depicted in the illustration to the right.

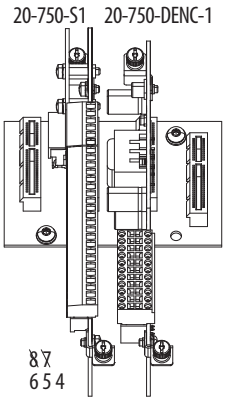

Auxiliary Power Supply (20-750-APS) Installation

A connector cable is provided with the Auxiliary Power Supply option module for use in PowerFlex 753 drives and in PowerFlex 755 Frame 1 drives. The cable is used to connect the module to the backplane when installed on the upper control pod brackets.

IMPORTANT Do not use the Auxiliary Power Supply option module with PowerFlex 755 Frame 8 and larger drives. See the PowerFlex 750-Series AC Drives Installation Instructions, publication 750-IN001, for information on the connection of an external power supply to a PowerFlex 755 Frame 8 and larger drive.

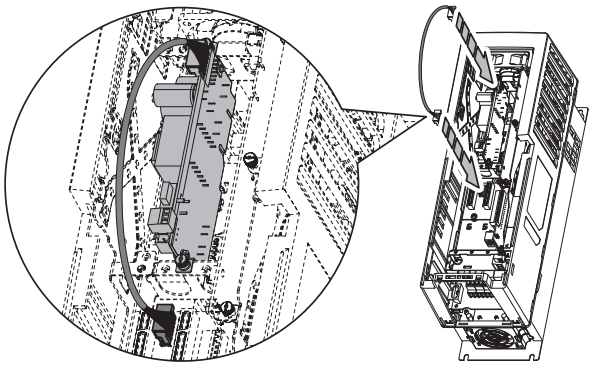

Option Module Installation Next to a PROFIBUS Option Module

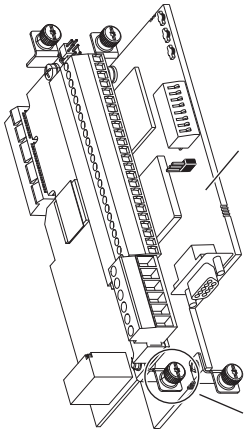

Do not allow the lower T15 Torx™ mounting screw (Detail A) on a new module to contact the metal cable connector of an installed PowerFlex 20-750-PBUS PROFIBUS option module. Electrical contact of the two metal parts can cause faulty operation. Perform these steps to help prevent contact. If a PowerFlex 20-750-PBUS PROFIBUS option module is not in that port, disregard these steps.

1.Remove the lower T15 Torx mounting screw (Detail A) from the new module being installed. To remove the captive T15 Torx screw, the module must be removed to back the screw out of the mounting clip.

2.Replace the larger T15 Torx screw with the smaller spare T8 Torx mounting screw that was shipped with the PowerFlex 20-750-PBUS PROFIBUS option module.

11-Series and 22-Series I/O Module Installation

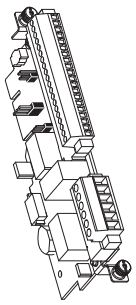

20-750-1132C-2R (24V DC)
20-750-1133C-1R2T (24V DC)

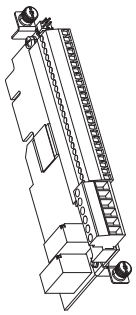

20-750-2262C-2R (24V DC)
20-750-2263C-1R2T (24V DC)

ATTENTION: When used in an Integrated Motion on EtherNet/IP™ network application for firmware revisions 12 and later, both the 11-Series and 22-Series I/O modules must be installed in port 7 only. You cannot use the ATEX option module with the 11-Series I/O module in port 7 when used in an Integrated Motion on EtherNet/IP application.

Additional Resources

These documents contain additional information concerning related products from Rockwell Automation®.

Resource	Description
PowerFlex 750-Series I/O, Feedback, and Power Option Modules Installation Instructions, publication 750-IN111	Provides drive compatibility, jumper settings, terminal designations, wiring examples for analog and digital I/O, feedback, and auxiliary power options option modules.
Network Communication Option Module Installation Instructions, publication 750COM-IN002	Provides information on the installation of PowerFlex 750-Series Network Communication modules.
PowerFlex 750-Series AC Drives Installation Instructions, publication 750-IN001	Provides information on the mechanical and electrical installation of PowerFlex 750-Series drives.
PowerFlex 750-Series Products with TotalFORCE Control Installation Instructions, publication 750-IN100	Provides information on the mechanical and electrical installation of PowerFlex 750-Series products with TotalFORCE control.
PowerFlex 755TM IP00 Open Type Kits Installation Instructions, publication 750-IN101	Information on the installation of PowerFlex 755TM IP00 / Open Type kits in customer-sourced enclosures.
PowerFlex 750-Series Safe Speed Monitor Option Module Safety Reference Manual, publication 750-RM001	These publications provide detailed information on installation, set-up, and operation of the 750-Series safety option modules.
PowerFlex 750-Series Safe Torque Off Option Module User Manual, publication 750-UM002	
PowerFlex 750-Series ATEX Option Module User Manual, publication 750-UM003	
PowerFlex 755 Integrated Safety - Safe Torque Off Option Module User Manual, publication 750-UM004	
PowerFlex 755/755T Integrated Safety Functions Option Module User Manual, publication 750-UM005	
Industrial Automation Wiring and Grounding Guidelines, publication 1770-4.1	Provides general guidelines for installing a Rockwell Automation industrial system.
Product Certifications website rok.auto/certifications	Provides declarations of conformity, certificates, and other certification details.

You can view or download publications at http://www.rockwellautomation.com/global/literature-library/overview.page.

Rockwell Automation maintains current product environmental information on its website at http://www.rockwellautomation.com/rockwellautomation/about-us/sustainability-ethics/product-environmental-compliance.page.

Allen-Bradley, PowerFlex, Rockwell Automation, Rockwell Software, and TotalFORCE are trademarks of Rockwell Automation, Inc.
Trademarks not belonging to Rockwell Automation are property of their respective companies.

Rockwell Otomasyon Ticaret A.Ş., Kar Plaza İş Merkezi E Blok Kat:6 34752 İçerenköy, İstanbul, Tel: +90 (216) 5698400

www.rockwellautomation.com

Power, Control and Information Solutions Headquarters

Americas: Rockwell Automation, 1201 South Second Street, Milwaukee, WI 53204-2496 USA, Tel: (1) 414.382.2000, Fax: (1) 414.382.4444
Europe/Middle East/Africa: Rockwell Automation NV, Pegasus Park, De Kleetlaan 12a, 1831 Diegem, Belgium, Tel: (32) 2 663 0600, Fax: (32) 2 663 0640
Asia Pacific: Rockwell Automation, Level 14, Core F, Cyberport 3, 100 Cyberport Road, Hong Kong, Tel: (852) 2887 4788, Fax: (852) 2508 1846

PN-541717

Publication 750-IN002J-MU-P - July 2019
Supersedes Publication 750-IN002I-MU-P - September 2016

Copyright © 2019 Rockwell Automation, Inc. All rights reserved. Printed in the U.S.A.