Direct Operated 2 Port Solenoid Valve

New

Air | Medium vacuum | Water | Oil | Steam

* Can be used with heated water.

Note) For air and water only

RoHS

Large flow rate

Flow rate

20% More flow*

(Size 1)

* Comparison with SMC conventional model

Compact

Height

10% Smaller*

(Size 1)

Lightweight

Weight

30% Lighter*

(Size 1, Aluminum body)

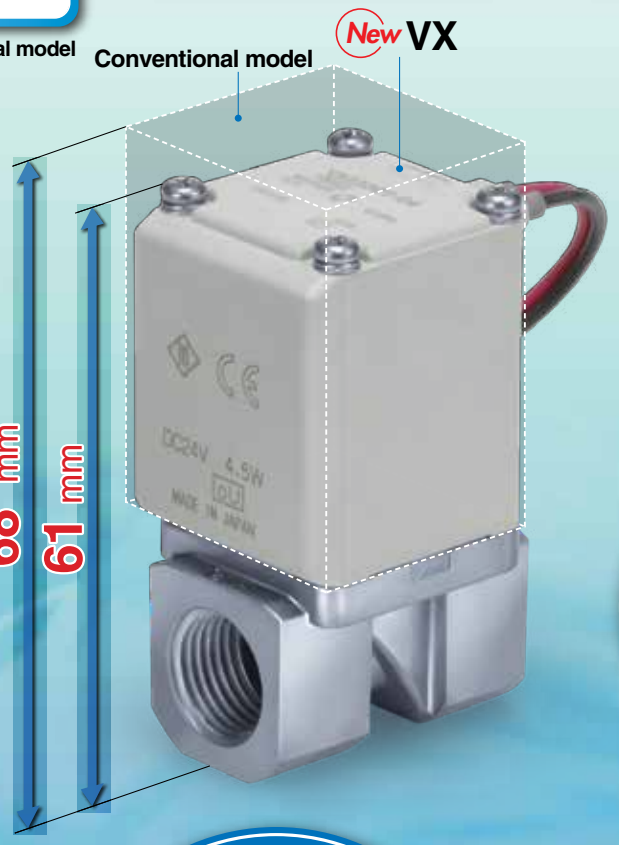

Body material

Air
Aluminum, Resin

Water/Oil/
Medium vacuum/Steam
C37 (Brass),
Stainless steel

Enclosure

IP65*

* Electrical entry
Flat terminal type
terminal is IP40.

With One-touch fittings
(Resin body)

Power consumption

4.5 W (Size 1)
7 W (Size 2)
10.5 W (Size 3)
(DC/N.C. valve)

Air | Medium vacuum

Manifold

Material
- Body/PPS
- Base/Aluminum
- Seal/NBR, FKM

Solenoid coil type

- Insulation type Class B/H
- Fluid temperature
  Class B/Max. 140°F (60°C)
  Class H/Max. 361°F (183°C)

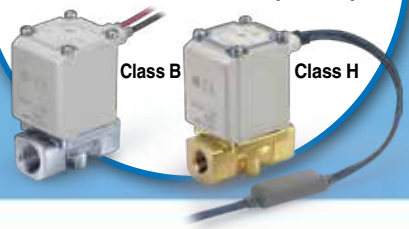

Valve type

N.C. N.O.

Series VX21/22/23

SMC

CAT.NAS70-44D

Direct Operated 2 Port Solenoid Valve

Air | Medium vacuum | Water | Oil | Steam
* Can be used with heated water.

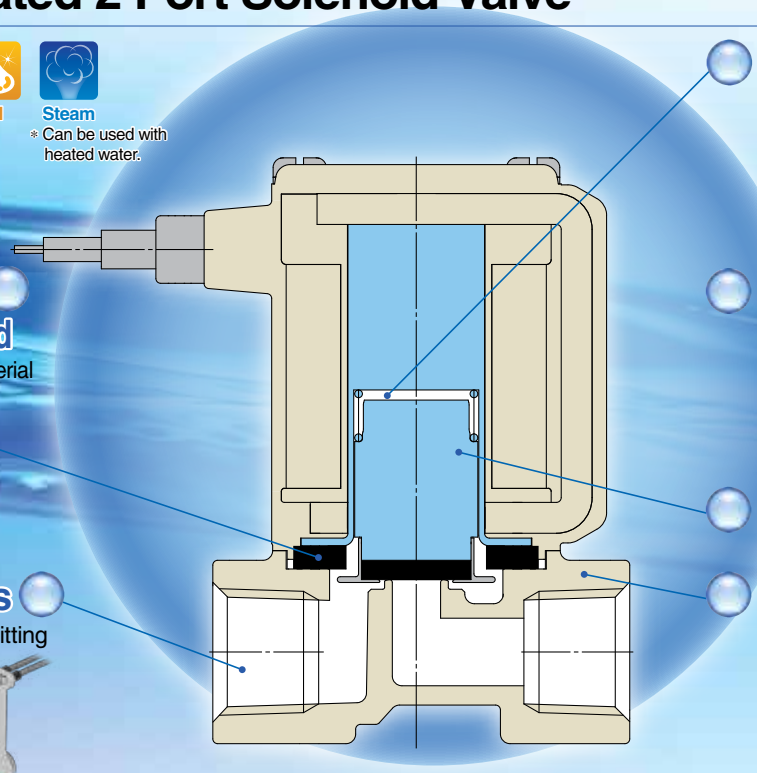

Enclosure
IP65

Flame resistance
UL94V-0 conformed
Flame resistant mold coil material

Low-noise construction
Metal noise reduced by the rubber bumper

Piping variations
Thread piping, One-touch fitting

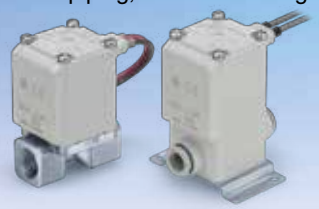

Clearance
By providing a bumper and clearance, we reduced the collision sound of the core when ON (when the valve is open). Because of the clearance, when using highly viscous fluids such as oil, the armature does not get stuck and the responsiveness when OFF (when the valve is closed) is improved.

Power consumption
* DC/Class B, N.C. valve

4.5 W (Size 1)
7 W (Size 2)
10.5 W (Size 3)

Improved armature durability

Body material
Air Aluminum, Resin
Water/ Oil/ Medium vacuum/ Steam C37 (Brass), Stainless steel

Full-wave rectifier type (AC specification: Insulation type Class B/H)

Improved durability
Service life is extended by the special construction. (compared with current shading coil)

Reduced buzz noise
Rectified to DC by the full-wave rectifier, resulting in a buzz noise reduction.

Reduced apparent power * Class B, N.C. valve
10 VA→**7** VA (Size 1) 20 VA→**9.5** VA (Size 2)
32 VA→**12** VA (Size 3)

Improved OFF response
Specially constructed to improve the OFF response when operated with a higher viscosity fluid such as oil.

Low-noise construction
Specially constructed to reduce the metal noise during operation.

Variations <Fluid>

Model	Applicable fluid *1 (* Can be used with heated water.)				
	Air	Medium vacuum	Water	Oil	Steam
For Air **VX2□0** Page 5	●	—	—	—	—
For Medium vacuum **VX2□4** Page 10	●*2	●	—	—	—
For Water **VX2□2** Page 14	●*2	—	●	—	—
For Oil **VX2□3** Page 16	●*2	—	●*2	●	—
For Steam * Can be used with heated water. **VX2□5** Page 18	●*2	—	●*2	●*2	●

*1 For details, refer to pages 45 and 46. *2 Refer to the individual specifications for each fluid.

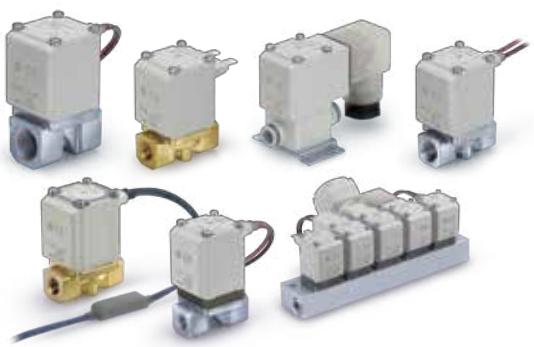

<Body Size>

Model	Body size	Orifice diameter							Port size
		2 mmø	3 mmø	4 mmø	5 mmø	7 mmø	8 mmø	10 mmø Note)	
VX2$^{1}_{4}$	**Size 1**	●	●	—	●	—	—	—	1/8, 1/4 One-touch fitting: ø6, ø8
VX2$^{2}_{5}$	**Size 2**	—	—	●	—	●	—	—	1/4, 3/8 One-touch fitting: ø8, ø10
VX2$^{3}_{6}$	**Size 3**	—	—	—	●	—	●	●	1/4, 3/8, 1/2 One-touch fitting: ø10, ø12

Note) N.C. only

INDEX

Direct Operated 2 Port Solenoid Valve

Series VX21/22/23

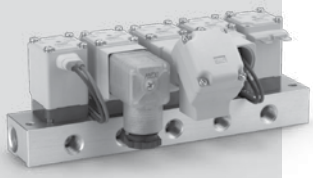

Single Unit/Manifold: Specifications 2
Common Specifications 3
Selection Steps 4

For Air

Model/Valve Specifications, Fluid and Ambient Temperature, Valve Leakage Rate 5, 6
How to Order (Single Unit) 7
Model/Valve Specifications, Fluid and Ambient Temperature, Valve Leakage Rate 8
How to Order (Solenoid Valve for Manifold, Manifold Base),
Blanking Plate Assembly Part No., How to Order Manifold Assembly (Example) 9

For Medium Vacuum (0.1 Pa·abs or more)

Model/Valve Specifications, Fluid and Ambient Temperature, Valve Leakage Rate 10
How to Order (Single Unit) 11
Model/Valve Specifications, Fluid and Ambient Temperature, Valve Leakage Rate 12
How to Order (Solenoid Valve for Manifold, Manifold Base),
Blanking Plate Assembly Part No., How to Order Manifold Assembly (Example) 13

For Water

Model/Valve Specifications, Fluid and Ambient Temperature, Valve Leakage Rate 14
How to Order (Single Unit) 15

For Oil

Model/Valve Specifications, Fluid and Ambient Temperature, Valve Leakage Rate 16
How to Order (Single Unit) 17

For Steam ∗ Can be used with heated water.

Model/Valve Specifications, Fluid and Ambient Temperature, Valve Leakage Rate 18
How to Order (Single Unit) 19

Special Options 21
UL-compliant 24
Construction
Single Unit 26
Manifold 27
Dimensions (Single Unit) Body material: Aluminum 28
Body material: Resin 30
Body material: C37, Stainless steel 32
(Manifold) Base material: Aluminum 35
Replacement Parts 36
Glossary of Terms 37
Solenoid Valve Flow-rate Characteristics 38
Flow-rate Characteristics 43
Specific Product Precautions 45

Direct Operated 2 Port Solenoid Valve

Series VX21/22/23

For Air, Medium Vacuum, Water, Oil and Steam

Variations

Single Unit (For Air, Medium Vacuum, Water, Oil and Steam)

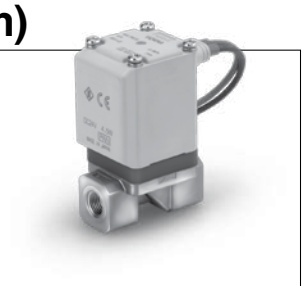

■ Valve type

Normally Closed (N.C.)
Normally Open (N.O.)

■ Solenoid coil type

Insulation type: Class B, Class H

■ Rated voltage

100 V/200 V/110 V/230 VAC
(220 V/240 V/48 V/24 VAC)
24 VDC (12 VDC)

Voltage in ( ) indicates special voltage.

■ Material

Body — Aluminum, Resin, C37 (Brass), Stainless steel
Seal — NBR, FKM*

* Refer to individual pages for details of each fluid.

■ Electrical entry

- Grommet
- Conduit
- DIN terminal
- Conduit terminal
- Flat terminal

Normally Closed (N.C.) **Normally Open (N.O.)**

Size		Size 1	Size 2	Size 3
Orifice diameter	2 mmø	●	—	—
	3 mmø	●	—	—
	4 mmø	—	●	—
	5 mmø	●	—	●
	7 mmø	—	●	—
	8 mmø	—	—	●
	10 mmø	—	—	●*
Port size		1/8, 1/4 ø6, ø8	1/4, 3/8 ø8, ø10	1/4, 3/8, 1/2 ø10, ø12

* N.C. only

Manifold (For Air, Medium Vacuum)

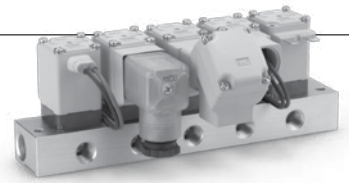

■ Valve type

Normally Closed (N.C.)
Normally Open (N.O.)

■ Manifold type

Common SUP type
Individual SUP type

■ Solenoid coil type

Insulation type: Class B

■ Rated voltage

100 V/200 V/110 V/230 VAC
(220 V/240 V/48 V/24 VAC)
24 VDC (12 VDC)

Voltage in ( ) indicates special voltage.

■ Material

Body — Resin
Base — Aluminum
Seal — NBR, FKM

■ Electrical entry

- Grommet
- Conduit
- DIN terminal
- Conduit terminal
- Flat terminal

Manifold

Size			Size 1	Size 2	Size 3
Orifice diameter		2 mmø	●	—	—
		3 mmø	●	—	—
		4 mmø	—	●	—
		5 mmø	●	—	●
		7 mmø	—	●	●
Port size	Common SUP type (Air)	IN	3/8		
		OUT	1/8, 1/4		
	Individual SUP type (Medium vacuum)	IN	1/8, 1/4		
		OUT	3/8		

Series VX21/22/23
Common Specifications

Standard Specifications

Valve specifications	Valve construction		Direct operated poppet
	Withstand pressure		290 psi (2.0 MPa) (Resin body type 218 psi [1.5 MPa])
	Body material		Aluminum, Resin, C37 (Brass), Stainless steel
	Seal material Note 3)		NBR, FKM
	Enclosure		Dust-tight, Water-jet-proof type (IP65) Note 1)
	Environment		Location without corrosive or explosive gases
Coil specifications	Rated voltage	AC	100 VAC, 200 VAC, 110 VAC, 230 VAC, (220 VAC, 240 VAC, 48 VAC, 24 VAC) Note 2)
		DC	24 VDC, (12 VDC) Note 2)
	Allowable voltage fluctuation		±10% of rated voltage
	Allowable leakage voltage	AC	5% or less of rated voltage
		DC	2% or less of rated voltage
	Coil insulation type		Class B, Class H

Note 1) Electrical entry flat terminal type terminal is IP40.
Note 2) Voltage in ( ) indicates special voltage. (Refer to page 21.)
Note 3) For seal material/EPDM, refer to X332. (Refer to page 23.)

⚠ **Be sure to read "Specific Product Precautions" before handling.**

Solenoid Coil Specifications

Normally Closed (N.C.)

DC Specification

Class B

Size	Power consumption (W) Note 1)	Temperature rise °F [°C] Note 2)
Size 1	4.5	122 [50]
Size 2	7	131 [55]
Size 3	10.5	149 [65]

Class H

Size	Power consumption (W) Note 1)	Temperature rise °F [°C] Note 2)
Size 1	9	212 [100]
Size 2	12	212 [100]
Size 3	15	212 [100]

Note 1) Power consumption: The value at ambient temperature of 68°F (20°C) and when the rated voltage is applied. (Variation: ±10%)
Note 2) The value at ambient temperature of 68°F (20°C) and when the rated voltage is applied. The value depends on the ambient environment. This is for reference.

AC Specification (Built-in Full-wave Rectifier Type)

Class B

Size	Apparent power (VA) Note 1) 2)	Temperature rise °F [°C] Note 3)
Size 1	7	140 [60]
Size 2	9.5	158 [70]
Size 3	12	158 [70]

Class H

Size	Apparent power (VA) Note 1) 2)	Temperature rise °F [°C] Note 3)
Size 1	9	212 [100]
Size 2	12	212 [100]
Size 3	15	212 [100]

Note 1) Apparent power: The value at ambient temperature of 68°F (20°C) and when the rated voltage is applied. (Variation: ±10%)
Note 2) There is no difference in the frequency and the inrush and energized apparent power, since a rectifying circuit is used in the AC.
Note 3) The value at ambient temperature of 68°F (20°C) and when the rated voltage is applied. The value depends on the ambient environment. This is for reference.

Normally Open (N.O.)

DC Specification

Class B

Size	Power consumption (W) Note 1)	Temperature rise °F [°C] Note 2)
Size 1	7.5	140 [60]
Size 2	8.5	158 [70]
Size 3	12.5	158 [70]

Class H

Size	Power consumption (W) Note 1)	Temperature rise °F [°C] Note 2)
Size 1	9	212 [100]
Size 2	12	212 [100]
Size 3	15	212 [100]

Note 1) Power consumption: The value at ambient temperature of 68°F (20°C) and when the rated voltage is applied. (Variation: ±10%)
Note 2) The value at ambient temperature of 68°F (20°C) and when the rated voltage is applied. The value depends on the ambient environment. This is for reference.

AC Specification (Built-in Full-wave Rectifier Type)

Class B

Size	Apparent power (VA) Note 1) 2)	Temperature rise °F [°C] Note 3)
Size 1	9	140 [60]
Size 2	10	158 [70]
Size 3	14	158 [70]

Class H

Size	Apparent power (VA) Note 1) 2)	Temperature rise °F [°C] Note 3)
Size 1	9	212 [100]
Size 2	12	212 [100]
Size 3	15	212 [100]

Note 1) Apparent power: The value at ambient temperature of 68°F (20°C) and when the rated voltage is applied. (Variation: ±10%)
Note 2) There is no difference in the frequency and the inrush and energized apparent power, since a rectifying circuit is used in the AC.
Note 3) The value at ambient temperature of 68°F (20°C) and when the rated voltage is applied. The value depends on the ambient environment. This is for reference.

Selection Steps

Selection Steps

Step 1 **Select the fluid.**

Item	Selection item	Page	Symbol	
Select the fluid.	Air	Page 5, 6	0	❶
	Water	Page 14	2	
	Oil	Page 16	3	
	Medium vacuum	Page 10	4	
	Steam ※ Can be used with heated water.	Page 18	5	

VX2 3 **0** A A
❶

Step 2 **Select "Body material", "Port size" and "Orifice diameter" from "Flow rate — Pressure" of each fluid.**

Item	Selection item		Symbol	
Select from "Flow rate — Pressure." ● Body material ● Port size ● Orifice diameter	Size	Size 3	3	❷
	Body material	Aluminum	A	❸
	Port size	1/8		
	Orifice diameter	2		

VX2 **3** 0 **A** A
❷ ❸

Step 3 **Select electrical specification.**

Item	Selection item		Symbol	
Select electrical specification.	Voltage	24 VDC	A	❹
	Electrical entry	Grommet		

VX2 3 0 A **A**
❹

Step 4 **For special options, refer to pages 21 to 23.**

For Air Single Unit

Model/Valve Specifications

N.C.

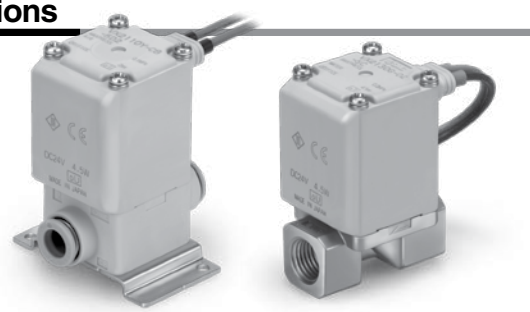

Symbol

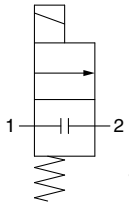

When the valve is closed, flow is blocked from port 1 to port 2. However, if the pressure in port 2 is higher than port 1, the valve will not be able to block the fluid and it will flow from port 2 to port 1.

Aluminum Body Type

Size	Port size	Orifice diameter (mmø)	Model	Flow-rate characteristics			Maximum operating pressure differential psi (MPa)	Max. system pressure psi (MPa)	Weight Note) (g)
				C [dm³/(s·bar)]	b	Cv			
1	1/8, 1/4	2	VX210	0.63	0.63	0.23	145 (1.0)	145 (1.0)	220
		3		1.05	0.68	0.41	87 (0.6)		220
		5		2.20	0.39	0.62	29 (0.2)		220
2	1/4, 3/8	4	VX220	1.90	0.52	0.62	145 (1.0)		340
		7		3.99	0.44	1.08	22 (0.15)		340
3	1/4, 3/8	5	VX230	1.96	0.55	0.75	145 (1.0)		450
		8		5.67	0.33	1.58	44 (0.3)		450
		10		5.74	0.64	2.21	15 (0.1)		450
	1/2	10		8.42	0.39	2.21	15 (0.1)		470

Resin Body Type (Built-in One-touch Fittings)

Size	Port size	Orifice diameter (mmø)	Model	Flow-rate characteristics			Maximum operating pressure differential psi (MPa)	Max. system pressure psi (MPa)	Weight Note) (g)
				C [dm³/(s·bar)]	b	Cv			
1	ø6	2	VX210	0.82	0.44	0.23	145 (1.0)	145 (1.0)	220
		3		1.25	0.34	0.35	87 (0.6)		220
		5		1.45	0.43	0.40	29 (0.2)		220
	ø8	2		0.82	0.44	0.23	145 (1.0)		220
		3		1.81	0.40	0.41	87 (0.6)		220
		5		2.11	0.32	0.56	29 (0.2)		220
2	ø8	4	VX220	1.69	0.40	0.47	145 (1.0)		340
		7		3.14	0.34	0.84	22 (0.15)		340
	ø10	4		1.68	0.49	0.50	145 (1.0)		340
		7		3.54	0.36	0.90	22 (0.15)		340
3	ø10	5	VX230	2.50	0.44	0.70	145 (1.0)		460
		8		2.77	0.82	1.22	44 (0.3)		460
		10		5.69	0.46	1.54	15 (0.1)		460
	ø12	5		2.50	0.44	0.70	145 (1.0)		460
		8		2.56	0.88	1.38	44 (0.3)		460
		10		5.69	0.64	1.76	15 (0.1)		460

Note) Weight of grommet type. Add 10 g for conduit type, 30 g for DIN terminal type, 60 g for conduit terminal type respectively.
- Refer to "Glossary of Terms" on page 37 for details on the maximum operating pressure differential.

Fluid and Ambient Temperature

Fluid temperature °F (°C)	Ambient temperature °F (°C)
14 to 140 (–10 Note) to 60)	–4 to 140 (–20 to 60)

Note) Dew point temperature: 14°F (–10°C) or less

Valve Leakage Rate

Internal Leakage

Seal material Note 2)	Leakage rate (Air) Note 1)
NBR (FKM)	1 cm³/min or less (Aluminum body type)
	15 cm³/min or less (Resin body type)

External Leakage

Seal material Note 2)	Leakage rate (Air) Note 1)
NBR (FKM)	1 cm³/min or less (Aluminum body type)
	15 cm³/min or less (Resin body type)

Note 1) Leakage is the value at ambient temperature 68°F (20°C).
Note 2) For seal material/FKM, refer to "Other Options" on page 21 for the selection.

For Air Single Unit

Model/Valve Specifications

N.O.

Symbol

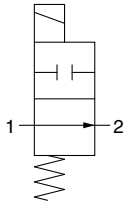

When the valve is closed, flow is blocked from port 1 to port 2. However, if the pressure in port 2 is higher than port 1, the valve will not be able to block the fluid and it will flow from port 2 to port 1.

Aluminum Body Type

Size	Port size	Orifice diameter (mmø)	Model	Flow-rate characteristics			Maximum operating pressure differential psi (MPa)	Max. system pressure psi (MPa)	Weight Note) (g)
				C [dm³/(s·bar)]	b	Cv			
1	1/8, 1/4	2	VX240	0.63	0.63	0.23	131 (0.9)	145 (1.0)	240
		3		1.05	0.68	0.41	65 (0.45)		240
		5		2.20	0.39	0.62	29 (0.2)		240
2	1/4, 3/8	4	VX250	1.90	0.52	0.62	116 (0.8)		370
		7		3.99	0.44	1.08	22 (0.15)		370
3	1/4, 3/8	5	VX260	1.96	0.55	0.75	116 (0.8)		490
		8		5.67	0.33	1.58	44 (0.3)		490

Resin Body Type (Built-in One-touch Fittings)

Size	Port size	Orifice diameter (mmø)	Model	Flow-rate characteristics			Maximum operating pressure differential psi (MPa)	Max. system pressure psi (MPa)	Weight Note) (g)
				C [dm³/(s·bar)]	b	Cv			
1	ø6	2	VX240	0.82	0.44	0.23	131 (0.9)	145 (1.0)	240
		3		1.25	0.34	0.35	65 (0.45)		240
		5		1.45	0.43	0.40	29 (0.2)		240
	ø8	2		0.82	0.44	0.23	131 (0.9)		240
		3		1.81	0.40	0.41	65 (0.45)		240
		5		2.11	0.32	0.56	29 (0.2)		240
2	ø8	4	VX250	1.69	0.40	0.47	116 (0.8)		370
		7		3.14	0.34	0.84	22 (0.15)		370
	ø10	4		1.68	0.49	0.50	116 (0.8)		370
		7		3.54	0.36	0.90	22 (0.15)		370
3	ø10	5	VX260	2.50	0.44	0.70	116 (0.8)		500
		8		2.77	0.82	1.22	44 (0.3)		500
	ø12	5		2.50	0.42	0.70	116 (0.8)		500
		8		2.56	0.88	1.38	44 (0.3)		500

Note) Weight of grommet type. Add 10 g for conduit type, 30 g for DIN terminal type, 60 g for conduit terminal type respectively.
• Refer to "Glossary of Terms" on page 37 for details on the maximum operating pressure differential.

Fluid and Ambient Temperature

Fluid temperature °F (°C)	Ambient temperature °F (°C)
14 to 140 (–10 Note) to 60)	–4 to 140 (–20 to 60)

Note) Dew point temperature: 14°F (–10°C) or less

Valve Leakage Rate

Internal Leakage

Seal material Note 2)	Leakage rate (Air) Note 1)
NBR (FKM)	1 cm³/min or less (Aluminum body type)
	15 cm³/min or less (Resin body type)

External Leakage

Seal material Note 2)	Leakage rate (Air) Note 1)
NBR (FKM)	1 cm³/min or less (Aluminum body type)
	15 cm³/min or less (Resin body type)

Note 1) Leakage is the value at ambient temperature 68°F (20°C).
Note 2) For seal material/FKM, refer to "Other Options" on page 21 for the selection.

How to Order (Single Unit)

Note) Refer to the table on page 24 for UL-compliant.

RoHS

VX2 1 0 A A

Fluid

0	Air

Common Specifications

Seal material	NBR
Coil insulation type	Class B
Thread type	Rc*

* One-touch fittings are attached to the resin body type.

Coil size/Valve type

Size	Symbol	Valve type
Size 1	1	N.C.
	4	N.O.
Size 2	2	N.C.
	5	N.O.
Size 3	3	N.C.
	6	N.O.

Body material/Port size/Orifice diameter

Symbol	Body material	Port size	Orifice diameter
A	Aluminum	1/8	2
B			3
C			5
D		1/4	2
E			3
F			5
H	Resin (With bracket)	ø6	2
J			3
K			5
L		ø8	2
M			3
N			5
A	Aluminum	1/4	4
B			7
D		3/8	4
E			7
H	Resin (With bracket)	ø8	4
J			7
L		ø10	4
M			7
A	Aluminum	1/4	5
B			8
C			10 (N.C. only)
D		3/8	5
E			8
F			10 (N.C. only)
G		1/2	10 (N.C. only)
H	Resin (With bracket)	ø10	5
J			8
K			10 (N.C. only)
L		ø12	5
M			8
N			10 (N.C. only)

Voltage/Electrical entry

Symbol	Voltage	Electrical entry
A	24 VDC	Grommet 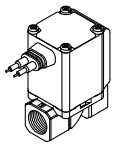
B	100 VAC	Grommet (With surge voltage suppressor) 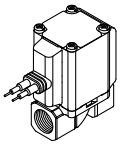
C	110 VAC	
D	200 VAC	
E	230 VAC	
F	24 VDC	
G	24 VDC	DIN terminal (With surge voltage suppressor) 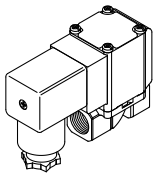
H	100 VAC	
J	110 VAC	
K	200 VAC	
L	230 VAC	
M	24 VDC	Conduit terminal (With surge voltage suppressor) 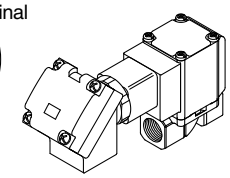
N	100 VAC	
P	110 VAC	
Q	200 VAC	
R	230 VAC	
S	24 VDC	Conduit (With surge voltage suppressor) 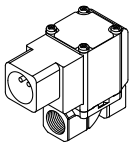
T	100 VAC	
U	110 VAC	
V	200 VAC	
W	230 VAC	
Y	24 VDC	Flat terminal 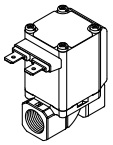
Z	Other voltages	

For special options, refer to pages 21 to 23.

Special voltage	24 VAC
	48 VAC
	220 VAC
	240 VAC
	12 VDC
DIN terminal with light	
Conduit terminal with light	
Without DIN connector	

Low concentration ozone resistant (Seal material: FKM)
Seal material: EPDM
Oil-free
G thread
NPT thread
With bracket (Aluminum body only)
Mounting holes on the bottom side of the body (Aluminum body only)
Special electrical entry direction

Dimensions → Pages 28 to 31 (Single unit)

For Air Manifold

∗ For other fluids, please contact SMC.

Model/Valve Specifications

N.C.

Symbol

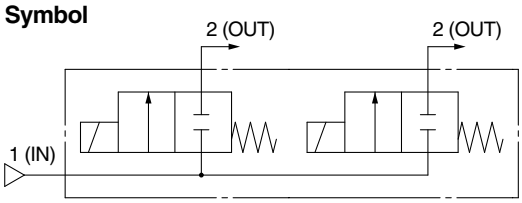

Common SUP type

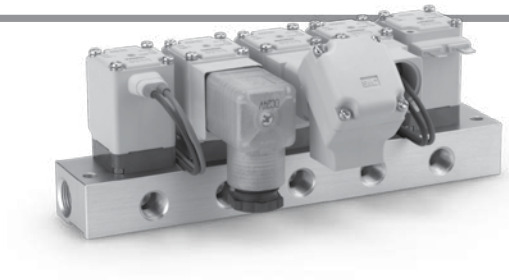

N.O.

Symbol

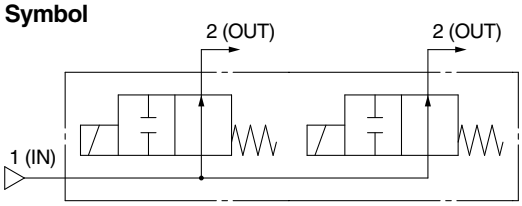

Common SUP type

When the valve is closed, flow is blocked from port 1 to port 2. However, if the pressure in port 2 is higher than port 1, the valve will not be able to block the fluid and it will flow from port 2 to port 1.

Normally Closed (N.C.)

Size	Orifice diameter (mmø)	Model	Flow-rate characteristics			Maximum operating pressure differential psi (MPa)	Max. system pressure psi (MPa)
			C [dm³/(s·bar)]	b	Cv		
1	2	VX2A0	0.63	0.63	0.23	145 (1.0)	145 (1.0)
	3		1.05	0.68	0.41	87 (0.6)	
	5		2.20	0.39	0.62	29 (0.2)	
2	4	VX2B0	1.90	0.52	0.62	145 (1.0)	
	7		3.99	0.44	1.08	22 (0.15)	
3	5	VX2C0	1.96	0.55	0.75	145 (1.0)	
	7		3.99	0.44	1.08	44 (0.3)	

Normally Open (N.O.)

Size	Orifice diameter (mmø)	Model	Flow-rate characteristics			Maximum operating pressure differential psi (MPa)	Max. system pressure psi (MPa)
			C [dm³/(s·bar)]	b	Cv		
1	2	VX2D0	0.63	0.63	0.23	131 (0.9)	145 (1.0)
	3		1.05	0.68	0.41	65 (0.45)	
	5		2.20	0.39	0.62	29 (0.2)	
2	4	VX2E0	1.90	0.52	0.62	116 (0.8)	
	7		3.99	0.44	1.08	22 (0.15)	
3	5	VX2F0	1.96	0.55	0.75	116 (0.8)	
	7		3.99	0.44	1.08	44 (0.3)	

Fluid and Ambient Temperature

Fluid temperature °F (°C)	Ambient temperature °F (°C)
14 to 140 (–10 Note) to 60)	–4 to 140 (–20 to 60)

Note) Dew point temperature: 14 (–10°C) or less

Valve Leakage Rate

Internal Leakage

Seal material Note 2)	Leakage rate Note 1)
NBR (FKM)	1 cm³/min or less

External Leakage

Seal material Note 2)	Leakage rate Note 1)
NBR (FKM)	1 cm³/min or less

Note 1) Leakage is the value at ambient temperature 68°F (20°C).
Note 2) For seal material/FKM, refer to “Other Options” on page 21 for the selection.

How to Order (Solenoid Valve for Manifold)

VX2 A 0 A A

Fluid

0	Air

Common Specifications

Seal material	NBR
Coil insulation type	Class B

Coil size/Valve type

Size	Symbol	Valve type
Size 1	A	N.C.
	D	N.O.
Size 2	B	N.C.
	E	N.O.
Size 3	C	N.C.
	F	N.O.

Body material/Orifice diameter

Symbol	Body material	Orifice diameter
A	Resin	2
B		3
C		5
A	Resin	4
B		7
A	Resin	5
B		7

For special options, refer to pages 21 to 23.

Special voltage	24 VAC
	48 VAC
	220 VAC
	240 VAC
	12 VDC
DIN terminal with light	
Conduit terminal with light	
Without DIN connector	
Seal material: EPDM	
Low concentration ozone resistant (Seal material: FKM)	
Oil-free	
Special electrical entry direction	

⚠Caution

Mounting orientation exists when mounting valves onto manifold base. Refer to page 48 for details.

Voltage/Electrical entry

Symbol	Voltage	Electrical entry
A	24 VDC	Grommet
B	100 VAC	Grommet (With surge voltage suppressor)
C	110 VAC	
D	200 VAC	
E	230 VAC	
F	24 VDC	
G	24 VDC	DIN terminal (With surge voltage suppressor)
H	100 VAC	
J	110 VAC	
K	200 VAC	
L	230 VAC	
M	24 VDC	Conduit terminal (With surge voltage suppressor)
N	100 VAC	
P	110 VAC	
Q	200 VAC	
R	230 VAC	
S	24 VDC	Conduit (With surge voltage suppressor)
T	100 VAC	
U	110 VAC	
V	200 VAC	
W	230 VAC	
Y	24 VDC	Flat terminal
Z	Other voltages	

Manifold Base/How to Order

VVX2 1 0 A 02 ☐

Fluid

0	Air

Coil size

Size	Symbol
Size 1	1
Size 2	2
Size 3	3

Base material /Port size/Base type

Symbol	Base material	Individual port size	Base type
A	Aluminum	1/8	Common
B		1/4	SUP

Common port size: 3/8 (IN port)

Stations

Symbol	Stations
02	2 stations
03	3 stations
04	4 stations
05	5 stations
06	6 stations
07	7 stations
08	8 stations
09	9 stations
10	10 stations

Symbol	Oil-free	Special thread
Nil	—	Rc
A	—	G
B	—	NPT
D	○	G
E	○	NPT
Z	○	Rc

Blanking Plate Assembly Part No.

For size 1 **VVX021S – 4A – N**

For size 2 **VVX022S – 4A – N**

For size 3 **VVX023S – 4A – N**

When mounting a blanking plate assembly, if the solenoid valve for the manifold is ozone resistant, (Seal material: FKM), please select FKM.

Seal material

N	NBR
F	FKM

Dimensions → Page 35

How to Order Manifold Assembly (Example)

Enter the valve and blanking plate to be mounted under the manifold base part number.

<Example>

VVX210B05……..1
∗VX2A0AA ……4
∗VVX021S-4A-N ……1
→ "∗" is the symbol for mounting. Add an "∗" in front of the part numbers for solenoid valves etc. to be mounted.

D side (Stations) 1 2 3 4 5 U side

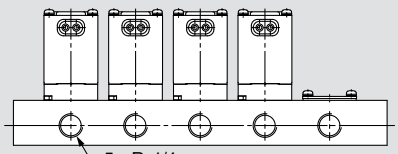

5 x Rc1/4
(Individual port)

Enter the product's part number in order, counting the 1st station from the D side (left in the manifold arrangement, when viewing the individual port in front).

For Medium Vacuum (0.1 Pa·abs or more) Single Unit

∗ This valve can also be used with air.
(Refer to the valve specifications for air.)

Model/Valve Specifications

Symbol (Application example)

N.C.

① Used with vacuum ② Used with pressure

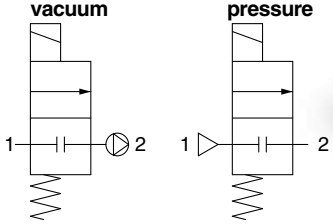

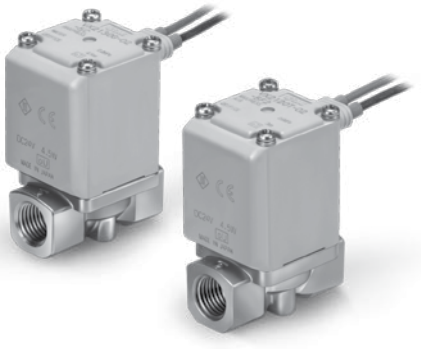

When the valve is closed, flow is blocked from port 1 to port 2.
However, if the pressure in port 2 is higher than port 1, the valve will not be able to block the fluid and it will flow from port 2 to port 1.

Symbol (Application example)

N.O.

① Used with vacuum ② Used with pressure

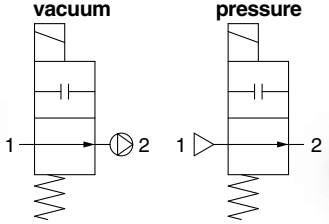

When the valve is closed, flow is blocked from port 1 to port 2.
However, if the pressure in port 2 is higher than port 1, the valve will not be able to block the fluid and it will flow from port 2 to port 1.

Normally Closed (N.C.)

Size	Port size	Orifice diameter (mmø)	Model	Flow-rate characteristics			Operating pressure range		Max. system pressure psi (MPa)	Note) Weight (g)
				C [dm³/(s·bar)]	b	Cv	① Used with vacuum (Pa·abs)	② Used with pressure psi (MPa·G)		
1	1/8, 1/4	2	VX214	0.63	0.63	0.23	0.1 to atmospheric pressure	0 to 145 (0 to 1.0)	145 (1.0)	300
		3		1.05	0.68	0.41		0 to 87 (0 to 0.6)		300
		5		2.20	0.39	0.62		0 to 29 (0 to 0.2)		300
2	1/4, 3/8	4	VX224	1.90	0.52	0.62		0 to 145 (0 to 1.0)		460
		7		3.99	0.44	1.08		0 to 22 (0 to 0.15)		460
3	1/4, 3/8	5	VX234	1.96	0.55	0.75		0 to 145 (0 to 1.0)		580
		8		5.67	0.33	1.58		0 to 44 (0 to 0.3)		580
		10		5.74	0.64	2.21		0 to 15 (0 to 0.1)		580
	1/2	10		8.42	0.39	2.21		0 to 15 (0 to 0.1)		630

Normally Open (N.O.)

Size	Port size	Orifice diameter (mmø)	Model	Flow-rate characteristics			Operating pressure range		Max. system pressure psi (MPa)	Note) Weight (g)
				C [dm³/(s·bar)]	b	Cv	① Used with vacuum (Pa·abs)	② Used with pressure psi (MPa·G)		
1	1/8, 1/4	2	VX244	0.63	0.63	0.23	0.1 to atmospheric pressure	0 to 131 (0 to 0.9)	145 (1.0)	320
		3		1.05	0.68	0.41		0 to 65 (0 to 0.45)		320
		5		2.20	0.39	0.62		0 to 29 (0 to 0.2)		320
2	1/4, 3/8	4	VX254	1.90	0.52	0.62		0 to 116 (0 to 0.8)		490
		7		3.99	0.44	1.08		0 to 22 (0 to 0.15)		490
3	1/4, 3/8	5	VX264	1.96	0.55	0.75		0 to 116 (0 to 0.8)		620
		8		5.67	0.33	1.58		0 to 44 (0 to 0.3)		620

Note) Weight of grommet type. Add 10 g for conduit type, 30 g for DIN terminal type, 60 g for conduit terminal type respectively.

Fluid and Ambient Temperature

Fluid temperature °F (°C)	Ambient temperature °F (°C)
34 to 140 (1 to 60) Note)	–4 to 140 (–20 to 60)

Note) With no freezing

Valve Leakage Rate

Internal Leakage

Seal material	Leakage rate Note)
FKM	10^{-6} Pa·m³/sec or less

External Leakage

Seal material	Leakage rate Note)
FKM	10^{-6} Pa·m³/sec or less

Note) Leakage (10^{-6} Pa·m³/sec) is the value at differential pressure 15 psi (0.1 MPa) and ambient temperature 68°F (20°C).

How to Order (Single Unit)

VX2 [1] 4 [A] [A]

Fluid

4	Medium vacuum

Common Specifications

Seal material	FKM
Coil insulation type	Class B
Thread type	Rc
Oil-free	
Non-leak	

Coil size/Valve type

Size	Symbol	Valve type
Size 1	1	N.C.
	4	N.O.
Size 2	2	N.C.
	5	N.O.
Size 3	3	N.C.
	6	N.O.

Body material/Port size/Orifice diameter

Symbol	Body material	Port size	Orifice diameter
A	C37	1/8	2
B			3
C			5
D		1/4	2
E			3
F			5
H	Stainless steel	1/8	2
J			3
K			5
L		1/4	2
M			3
N			5
A	C37	1/4	4
B			7
D		3/8	4
E			7
H	Stainless steel	1/4	4
J			7
L		3/8	4
M			7
A	C37	1/4	5
B			8
C			10 (N.C. only)
D		3/8	5
E			8
F			10 (N.C. only)
G		1/2	10 (N.C. only)
H	Stainless steel	1/4	5
J			8
K			10 (N.C. only)
L		3/8	5
M			8
N			10 (N.C. only)
P		1/2	10 (N.C. only)

Voltage/Electrical entry

Symbol	Voltage	Electrical entry
A	24 VDC	Grommet 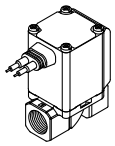
B	100 VAC	Grommet (With surge voltage suppressor) 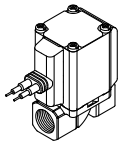
C	110 VAC	
D	200 VAC	
E	230 VAC	
F	24 VDC	
G	24 VDC	DIN terminal (With surge voltage suppressor) 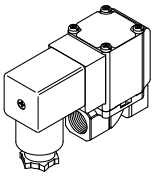
H	100 VAC	
J	110 VAC	
K	200 VAC	
L	230 VAC	
M	24 VDC	Conduit terminal (With surge voltage suppressor) 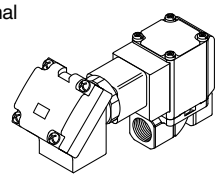
N	100 VAC	
P	110 VAC	
Q	200 VAC	
R	230 VAC	
S	24 VDC	Conduit (With surge voltage suppressor) 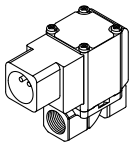
T	100 VAC	
U	110 VAC	
V	200 VAC	
W	230 VAC	
Y	24 VDC	Flat terminal 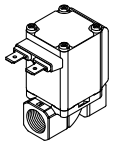
Z	Other voltages	

For special options, refer to pages 21 to 23.

Special voltage	24 VAC	Without DIN connector
	48 VAC	Seal material: EPDM
	220 VAC	G thread
	240 VAC	NPT thread
	12 VDC	With bracket
DIN terminal with light		Mounting holes on the bottom side of the body
Conduit terminal with light		Special electrical entry direction

Dimensions→ Pages 32, 33 (Single unit)

For Medium Vacuum (0.1 Pa·abs or more) Manifold

∗ For other fluids, please contact SMC.

Model/Valve Specifications

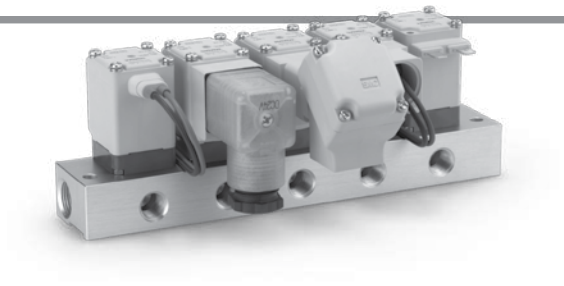

N.C.

Symbol

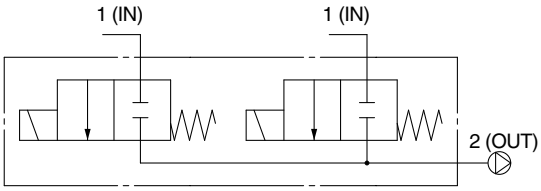

Individual SUP type

N.O.

Symbol

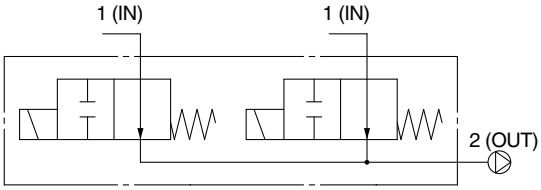

Individual SUP type

When the valve is closed, flow is blocked from port 1 to port 2.
However, if the pressure in port 2 is higher than port 1,
the valve will not be able to block the fluid and it will flow from port 2 to port 1.

Normally Closed (N.C.)

Size	Orifice diameter (mmø)	Model	Flow-rate characteristics			Maximum operating pressure differential psi (MPa)	Max. system pressure psi (MPa)
			C [dm³/(s·bar)]	b	Cv		
1	2	VX2A4	0.63	0.63	0.23	145 (1.0)	145 (1.0)
	3		1.05	0.68	0.41	87 (0.6)	
	5		2.20	0.39	0.62	29 (0.2)	
2	4	VX2B4	1.90	0.52	0.62	145 (1.0)	
	7		3.99	0.44	1.08	22 (0.15)	
3	5	VX2C4	1.96	0.55	0.75	145 (1.0)	
	7		3.99	0.44	1.08	44 (0.3)	

Normally Open (N.O.)

Size	Orifice diameter (mmø)	Model	Flow-rate characteristics			Maximum operating pressure differential psi (MPa)	Max. system pressure psi (MPa)
			C [dm³/(s·bar)]	b	Cv		
1	2	VX2D4	0.63	0.63	0.23	131 (0.9)	145 (1.0)
	3		1.05	0.68	0.41	65 (0.45)	
	5		2.20	0.39	0.62	29 (0.2)	
2	4	VX2E4	1.90	0.52	0.62	116 (0.8)	
	7		3.99	0.44	1.08	22 (0.15)	
3	5	VX2F4	1.96	0.55	0.75	116 (0.8)	
	7		3.99	0.44	1.08	44 (0.3)	

Fluid and Ambient Temperature

Fluid temperature °F (°C)	Ambient temperature °F (°C)
34 to 140 (1 to 60) Note)	–4 to 140 (–20 to 60)

Note) With no freezing

Valve Leakage Rate

Internal Leakage

Seal material	Leakage rate Note)
FKM	10^{-6} Pa·m³/sec or less

External Leakage

Seal material	Leakage rate Note)
FKM	10^{-6} Pa·m³/sec or less

Note) Leakage (10^{-6} Pa·m³/sec) is the value at differential pressure 15 psi (0.1 MPa) and ambient temperature 68°F (20°C).

How to Order (Solenoid Valve for Manifold)

VX2 [A] 4 [A] [A]

Fluid

4	Medium vacuum

Coil size/Valve type

Size	Symbol	Valve type
Size 1	A	N.C.
	D	N.O.
Size 2	B	N.C.
	E	N.O.
Size 3	C	N.C.
	F	N.O.

Body material/Orifice diameter

Symbol	Body material	Orifice diameter
A	Resin	2
B		3
C		5
A	Resin	4
B		7
A	Resin	5
B		7

Common Specifications

Seal material	FKM
Coil insulation type	Class B
Oil-free	
Non-leak	

Voltage/Electrical entry

Symbol	Voltage	Electrical entry
A	24 VDC	Grommet
B	100 VAC	Grommet (With surge voltage suppressor)
C	110 VAC	
D	200 VAC	
E	230 VAC	
F	24 VDC	
G	24 VDC	DIN terminal (With surge voltage suppressor)
H	100 VAC	
J	110 VAC	
K	200 VAC	
L	230 VAC	
M	24 VDC	Conduit terminal (With surge voltage suppressor)
N	100 VAC	
P	110 VAC	
Q	200 VAC	
R	230 VAC	
S	24 VDC	Conduit (With surge voltage suppressor)
T	100 VAC	
U	110 VAC	
V	200 VAC	
W	230 VAC	
Y	24 VDC	Flat terminal
Z	Other voltages	

For special options, refer to pages 21 to 23.

Special voltage	24 VAC
	48 VAC
	220 VAC
	240 VAC
	12 VDC
DIN terminal with light	
Conduit terminal with light	
Without DIN connector	
Seal material: EPDM	
Special electrical entry direction	

⚠ Caution
Mounting orientation exists when mounting valves onto manifold base. Refer to page 48 for details.

Manifold Base/How to Order

VVX2 [1] 4 [A] [02] [ ]

Fluid

4	Medium vacuum

Coil size

Size	Symbol
Size 1	1
Size 2	2
Size 3	3

Base material /Port size/Base type

Symbol	Base material	Individual port size	Base type
A	Aluminum	1/8	Individual SUP
B		1/4	

Common port size: 3/8 (OUT port)

Stations

Symbol	Stations
02	2 stations
03	3 stations
04	4 stations
05	5 stations
06	6 stations
07	7 stations
08	8 stations
09	9 stations
10	10 stations

Symbol	Special thread
Nil	Rc
A	G
B	NPT

Blanking Plate Assembly Part No.

For size 1 VVX021S-4A-F
For size 2 VVX022S-4A-F
For size 3 VVX023S-4A-F

Dimensions → Page 35

How to Order Manifold Assembly (Example)

Enter the valve and blanking plate to be mounted under the manifold base part number.

<Example>

VVX214B05……....1
∗VX2A4AA ……4
∗VVX021S-4A-F ……1
"∗" is the symbol for mounting.
Add an "∗" in front of the part numbers for solenoid valves etc. to be mounted.

D side — Stations 1 — 2 — 3 — 4 — 5 — U side

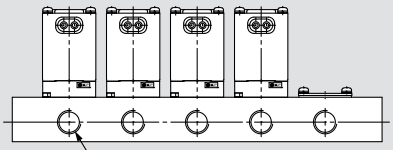

Enter the product's part number in order, counting the 1st station from the D side (left in the manifold arrangement, when viewing the individual port in front).

For Water Single Unit

∗ This valve can also be used with air.
(Refer to the valve specifications for air.)

Model/Valve Specifications

Symbol

N.C.

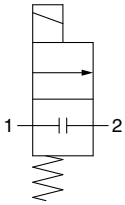

When the valve is closed, flow is blocked from port 1 to port 2.
However, if the pressure in port 2 is higher than port 1, the valve will not be able to block the fluid and it will flow from port 2 to port 1.

Symbol

N.O.

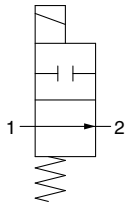

When the valve is closed, flow is blocked from port 1 to port 2.
However, if the pressure in port 2 is higher than port 1, the valve will not be able to block the fluid and it will flow from port 2 to port 1.

Normally Closed (N.C.)

Size	Port size	Orifice diameter (mmø)	Model	Flow-rate characteristics		Maximum operating pressure differential psi (MPa)	Max. system pressure psi (MPa)	Weight Note) (g)
				AV (x 10^{-6} m^2)	Conversion Cv			
1	1/8, 1/4	2	VX212	5.5	0.23	145 (1)	145 (1.0)	300
		3		10.0	0.42	87 (0.6)		300
		5		15.0	0.63	29 (0.2)		300
2	1/4, 3/8	4	VX222	15.0	0.63	145 (1)		460
		7		26.0	1.08	22 (0.15)		460
3	1/4, 3/8	5	VX232	18.0	0.75	145 (1)		580
		8		38.0	1.58	44 (0.3)		580
		10		53.0	2.21	15 (0.1)		580
	1/2	10		53.0	2.21	15 (0.1)		630

Normally Open (N.O.)

Size	Port size	Orifice diameter (mmø)	Model	Flow-rate characteristics		Maximum operating pressure differential psi (MPa)	Max. system pressure psi (MPa)	Weight Note) (g)
				AV (x 10^{-6} m^2)	Conversion Cv			
1	1/8, 1/4	2	VX242	5.5	0.23	131 (0.9)	145 (1.0)	320
		3		10.0	0.42	65 (0.45)		320
		5		15.0	0.63	29 (0.2)		320
2	1/4, 3/8	4	VX252	15.0	0.63	116 (0.8)		490
		7		26.0	1.08	22 (0.15)		490
3	1/4, 3/8	5	VX262	18.0	0.75	116 (0.8)		620
		8		38.0	1.58	44 (0.3)		620

Note) Weight of grommet type. Add 10 g for conduit type, 30 g for DIN terminal type, 60 g for conduit terminal type respectively.
• Refer to "Glossary of Terms" on page 37 for details on the maximum operating pressure differential.

Fluid and Ambient Temperature

Fluid temperature °F (°C)	Ambient temperature °F (°C)
34 to 140 (1 to 60) Note)	– 4 to 140 (–20 to 60)

Note) With no freezing

Valve Leakage Rate

Internal Leakage

Seal material Note 2)	Leakage rate (Water) Note 1)
NBR (FKM)	0.1 cm^3/min or less

External Leakage

Seal material Note 2)	Leakage rate (Water) Note 1)
NBR (FKM)	0.1 cm^3/min or less

Note 1) Leakage is the value at ambient temperature 68°F (20°C).
Note 2) For seal material/FKM, refer to "Other Options" on page 21 for the selection.

Note) Refer to the table on page 25 for UL-compliant.

RoHS

How to Order (Single Unit)

VX2 [1] [2] [A] [A]

Fluid

2	Water

Common Specifications

Seal material	NBR
Coil insulation type	Class B
Thread type	Rc

Coil size/Valve type

Size	Symbol	Valve type
Size 1	1	N.C.
	4	N.O.
Size 2	2	N.C.
	5	N.O.
Size 3	3	N.C.
	6	N.O.

Body material/Port size/Orifice diameter

Symbol	Body material	Port size	Orifice diameter
A	C37	1/8	2
B			3
C			5
D		1/4	2
E			3
F			5
H	Stainless steel	1/8	2
J			3
K			5
L		1/4	2
M			3
N			5
A	C37	1/4	4
B			7
D		3/8	4
E			7
H	Stainless steel	1/4	4
J			7
L		3/8	4
M			7
A	C37	1/4	5
B			8
C			10 (N.C. only)
D		3/8	5
E			8
F			10 (N.C. only)
G		1/2	10 (N.C. only)
H	Stainless steel	1/4	5
J			8
K			10 (N.C. only)
L		3/8	5
M			8
N			10 (N.C. only)
P		1/2	10 (N.C. only)

Voltage/Electrical entry

Symbol	Voltage	Electrical entry
A	24 VDC	Grommet 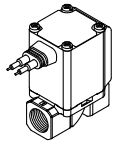
B	100 VAC	Grommet (With surge voltage suppressor) 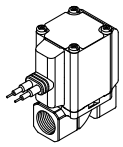
C	110 VAC	
D	200 VAC	
E	230 VAC	
F	24 VDC	
G	24 VDC	DIN terminal (With surge voltage suppressor) 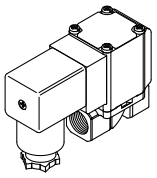
H	100 VAC	
J	110 VAC	
K	200 VAC	
L	230 VAC	
M	24 VDC	Conduit terminal (With surge voltage suppressor) 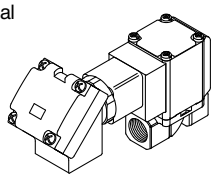
N	100 VAC	
P	110 VAC	
Q	200 VAC	
R	230 VAC	
S	24 VDC	Conduit (With surge voltage suppressor) 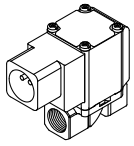
T	100 VAC	
U	110 VAC	
V	200 VAC	
W	230 VAC	
Y	24 VDC	Flat terminal 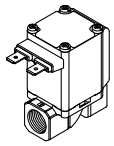
Z	Other voltages	

For special options, refer to pages 21 to 23.

Special voltage	24 VAC	Applicable to deionized water (Seal material: FKM)
	48 VAC	Seal material: EPDM
	220 VAC	Oil-free
	240 VAC	G thread
	12 VDC	NPT thread
DIN terminal with light		With bracket
Conduit terminal with light		Mounting holes on the bottom side of the body
Without DIN connector		Special electrical entry direction

Dimensions → Pages 32, 33 (Single unit)

For Oil Single Unit

∗ This valve can also be used with air or water.
(Refer to the valve specifications for air or water.)

⚠ When the fluid is oil.

The kinematic viscosity must not exceed 50 mm²/s.
The special construction of the armature adopted in the built-in full-wave rectifier type gives an improvement in OFF response by providing clearance on the absorbed surface when it is switched ON.

Model/Valve Specifications

Symbol

N.C.

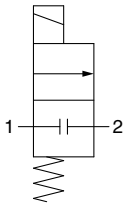

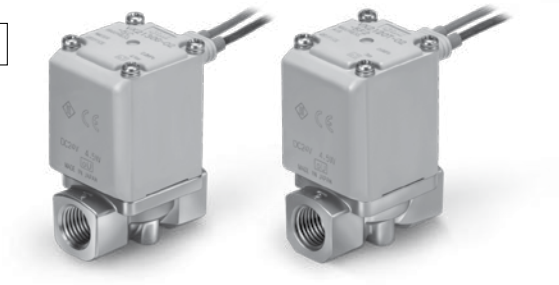

When the valve is closed, flow is blocked from port 1 to port 2. However, if the pressure in port 2 is higher than port 1, the valve will not be able to block the fluid and it will flow from port 2 to port 1.

Symbol

N.O.

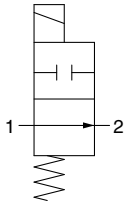

When the valve is closed, flow is blocked from port 1 to port 2. However, if the pressure in port 2 is higher than port 1, the valve will not be able to block the fluid and it will flow from port 2 to port 1.

Normally Closed (N.C.)

Size	Port size	Orifice diameter (mmø)	Model	Flow-rate characteristics		Maximum operating pressure differential psi (MPa)	Max. system pressure psi (MPa)	Weight Note) (g)
				AV (x 10^{-6}m²)	Conversion Cv			
1	1/8, 1/4	2	VX213	5.5	0.23	145 (1)	145 (1.0)	300
		3		10.0	0.42	87 (0.6)		300
		5		15.0	0.63	29 (0.2)		300
2	1/4, 3/8	4	VX223	15.0	0.63	145 (1)		460
		7		26.0	1.08	22 (0.15)		460
3	1/4, 3/8	5	VX233	18.0	0.75	145 (1)		580
		8		38.0	1.58	44 (0.3)		580
		10		53.0	2.21	15 (0.1)		580
	1/2	10		53.0	2.21	15 (0.1)		630

Normally Open (N.O.)

Size	Port size	Orifice diameter (mmø)	Model	Flow-rate characteristics		Maximum operating pressure differential psi (MPa)	Max. system pressure psi (MPa)	Weight Note) (g)
				AV (x 10^{-6}m²)	Conversion Cv			
1	1/8, 1/4	2	VX243	5.5	0.23	131 (0.9)	145 (1.0)	320
		3		10.0	0.42	65 (0.45)		320
		5		15.0	0.63	29 (0.2)		320
2	1/4, 3/8	4	VX253	15.0	0.63	116 (0.8)		490
		7		26.0	1.08	22 (0.15)		490
3	1/4, 3/8	5	VX263	18.0	0.75	116 (0.8)		620
		8		38.0	1.58	44 (0.3)		620

Note) Weight of grommet type. Add 10 g for conduit type, 30 g for DIN terminal type, 60 g for conduit terminal type respectively.
• Refer to “Glossary of Terms” on page 37 for details on the maximum operating pressure differential.

Fluid and Ambient Temperature

Fluid temperature °F (°C)	Ambient temperature °F (°C)
23 to 140 (–5 Note) to 60)	–4 to 140 (–20 to 60)

Note) Kinematic viscosity: 50 mm²/s or less

Valve Leakage Rate

Internal Leakage

Seal material	Leakage rate (Oil) Note)
FKM	0.1 cm³/min or less

External Leakage

Seal material	Leakage rate (Oil) Note)
FKM	0.1 cm³/min or less

Note) Leakage is the value at ambient temperature 68°F (20°C).

How to Order

VX2 1 3 A A

Fluid

3	Oil

Common Specifications

Seal material	FKM
Coil insulation type	Class B
Thread type	Rc

Coil size/Valve type

Size	Symbol	Valve type
Size 1	1	N.C.
	4	N.O.
Size 2	2	N.C.
	5	N.O.
Size 3	3	N.C.
	6	N.O.

Body material/Port size/Orifice diameter

Symbol	Body material	Port size	Orifice diameter
A	C37	1/8	2
B			3
C			5
D		1/4	2
E			3
F			5
H	Stainless steel	1/8	2
J			3
K			5
L		1/4	2
M			3
N			5
A	C37	1/4	4
B			7
D		3/8	4
E			7
H	Stainless steel	1/4	4
J			7
L		3/8	4
M			7
A	C37	1/4	5
B			8
C			10 (N.C. only)
D		3/8	5
E			8
F			10 (N.C. only)
G		1/2	10 (N.C. only)
H	Stainless steel	1/4	5
J			8
K			10 (N.C. only)
L		3/8	5
M			8
N			10 (N.C. only)
P		1/2	10 (N.C. only)

Voltage/Electrical entry

Symbol	Voltage	Electrical entry
A	24 VDC	Grommet 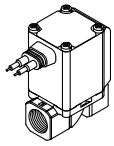
B	100 VAC	Grommet (With surge voltage suppressor) 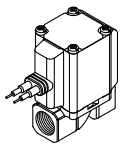
C	110 VAC	
D	200 VAC	
E	230 VAC	
F	24 VDC	
G	24 VDC	DIN terminal (With surge voltage suppressor) 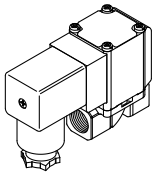
H	100 VAC	
J	110 VAC	
K	200 VAC	
L	230 VAC	
M	24 VDC	Conduit terminal (With surge voltage suppressor) 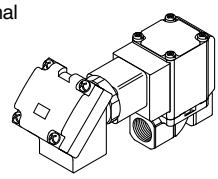
N	100 VAC	
P	110 VAC	
Q	200 VAC	
R	230 VAC	
S	24 VDC	Conduit (With surge voltage suppressor) 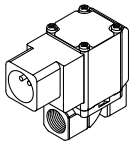
T	100 VAC	
U	110 VAC	
V	200 VAC	
W	230 VAC	
Y	24 VDC	Flat terminal 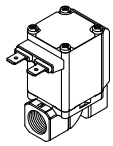
Z	Other voltages	

For special options, refer to pages 21 to 23.

Special voltage	24 VAC	Without DIN connector
	48 VAC	Oil-free
	220 VAC	G thread
	240 VAC	NPT thread
	12 VDC	With bracket
DIN terminal with light		Mounting holes on the bottom side of the body
Conduit terminal with light		Special electrical entry direction

Dimensions → Pages 32, 33 (Single unit)

For Steam Single Unit

∗ This valve can also be used with air, water, oil or heated water.
(Refer to the valve specifications for air, water or oil.)

Model/Valve Specifications

Symbol

N.C.

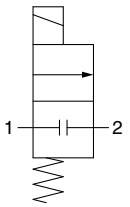

Symbol

N.O.

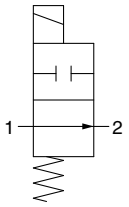

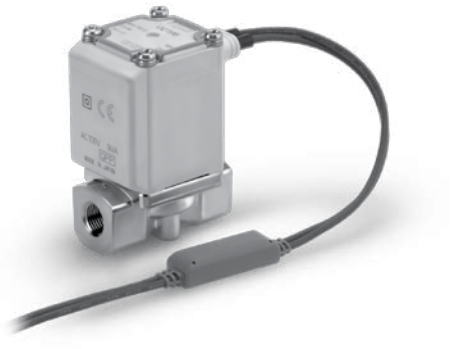

When the valve is closed, flow is blocked from port 1 to port 2.
However, if the pressure in port 2 is higher than port 1,
the valve will not be able to block the fluid and it will flow from port 2 to port 1.

Normally Closed (N.C.)

Size	Port size	Orifice diameter (mmø)	Model	Flow-rate characteristics		Maximum operating pressure differential psi (MPa)	Max. system pressure psi (MPa)	Weight Note) (g)
				AV (x 10^{-6} m^2)	Conversion Cv			
1	1/8, 1/4	2	VX215	5.5	0.23	145 (1)	145 (1.0)	300
		3		10.0	0.42	87 (0.6)		300
		5		15.0	0.63	29 (0.2)		300
2	1/4, 3/8	4	VX225	15.0	0.63	145 (1)		460
		7		26.0	1.08	22 (0.15)		460
3	1/4, 3/8	5	VX235	18.0	0.75	145 (1)		580
		8		38.0	1.58	44 (0.3)		580
		10		53.0	2.21	15 (0.1)		580
	1/2	10		53.0	2.21	15 (0.1)		630

Normally Open (N.O.)

Size	Port size	Orifice diameter (mmø)	Model	Flow-rate characteristics		Maximum operating pressure differential psi (MPa)	Max. system pressure psi (MPa)	Weight Note) (g)
				AV (x 10^{-6} m^2)	Conversion Cv			
1	1/8, 1/4	2	VX245	5.5	0.23	131 (0.9)	145 (1.0)	320
		3		10.0	0.42	65 (0.45)		320
		5		15.0	0.63	29 (0.2)		320
2	1/4, 3/8	4	VX255	15.0	0.63	116 (0.8)		490
		7		26.0	1.08	22 (0.15)		490
3	1/4, 3/8	5	VX265	18.0	0.75	116 (0.8)		620
		8		38.0	1.58	44 (0.3)		620

Note) Weight of grommet type. Add 10 g for conduit type, 60 g for conduit terminal type respectively.

Fluid and Ambient Temperature

Fluid temperature	Ambient temperature
Steam: 361°F (183°C) or less	–4 to 140°F (–20 to 60°C)
Heated water: 210°F (99°C) or less	

Valve Leakage Rate

Internal Leakage

Fluid	Seal material	Leakage rate
Steam	FKM for high temperature	1.0 cm^3/min or less
Heated water		0.1 cm^3/min or less

External Leakage

Fluid	Seal material	Leakage rate
Steam	FKM for high temperature	1.0 cm^3/min or less
Heated water		0.1 cm^3/min or less

How to Order (Single Unit)

VX2 1 5 A B

Fluid

5	Steam

∗ Can be used with heated water.

Common Specifications

Seal material	FKM for high temperature
Coil insulation type	Class H
Thread type	Rc

Coil size/Valve type

Size	Symbol	Valve type
Size 1	1	N.C.
	4	N.O.
Size 2	2	N.C.
	5	N.O.
Size 3	3	N.C.
	6	N.O.

Body material/Port size/Orifice diameter

Symbol	Body material	Port size	Orifice diameter
A	C37	1/8	2
B			3
C			5
D		1/4	2
E			3
F			5
H	Stainless steel	1/8	2
J			3
K			5
L		1/4	2
M			3
N			5
A	C37	1/4	4
B			7
D		3/8	4
E			7
H	Stainless steel	1/4	4
J			7
L		3/8	4
M			7
A	C37	1/4	5
B			8
C			10 (Only N.C.)
D		3/8	5
E			8
F			10 (Only N.C.)
G		1/2	10 (Only N.C.)
H	Stainless steel	1/4	5
J			8
K			10 (Only N.C.)
L		3/8	5
M			8
N			10 (Only N.C.)
P		1/2	10 (Only N.C.)

Voltage/Electrical entry

Symbol	Voltage	Electrical entry Note 3)
A	24 VDC	Grommet 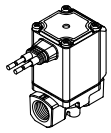
B	100 VAC	Grommet (With surge voltage suppressor) 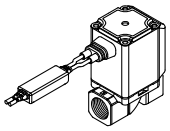
C	110 VAC	
D	200 VAC	
E	230 VAC	
G	24 VDC	DIN terminal (With surge voltage suppressor Note 1) 2)) 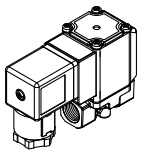
H	100 VAC	
J	110 VAC	
K	200 VAC	
L	230 VAC	
N	100 VAC	Conduit terminal (With surge voltage suppressor) 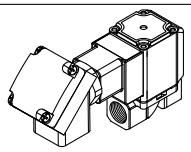
P	110 VAC	
Q	200 VAC	
R	230 VAC	
T	100 VAC	Conduit (With surge voltage suppressor) 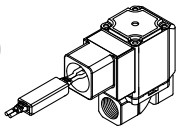
U	110 VAC	
V	200 VAC	
W	230 VAC	
Z	Other voltages	

Note 1) AC voltage coil for "H" of DIN terminal type does not have full-wave rectifier. Full-wave rectifier is built on the DIN connector side. Refer to page 36 to order it as an accessory.
Note 2) DIN connector insulation class is Class "B".
Note 3) Flat terminal is not available.

For special options, refer to pages 21 to 23.

Special voltage	24 VAC
	48 VAC
	220 VAC
	240 VAC
DIN terminal with light	
Conduit terminal with light	
Seal material: EPDM	
Oil-free	
G thread	
NPT thread	
With bracket	
Mounting holes on the bottom side of the body	
Special electrical entry direction	

Dimensions → Page 34 (Single unit)

Special Options

Electrical Options
(Special voltage, With light, Without DIN connector)

VX2 1 0 A Z 1A

- **Enter standard product number.**
- **Electrical option**

Electrical specification/Voltage/Electrical entry

Specification	Symbol	Class H*	Voltage	Electrical entry
Special voltage	1A	●	48 VAC	Grommet (With surge voltage suppressor)
	1B	●	220 VAC	
	1C	●	240 VAC	
	1U	●	24 VAC	
	1D	—	12 VDC	Grommet
	1E	—	12 VDC	Grommet (With surge voltage suppressor)
	1F	●	48 VAC	DIN terminal (With surge voltage suppressor)
	1G	●	220 VAC	
	1H	●	240 VAC	
	1V	●	24 VAC	
	1J	—	12 VDC	
	1K	●	48 VAC	Conduit terminal (With surge voltage suppressor)
	1L	●	220 VAC	
	1M	●	240 VAC	
	1W	●	24 VAC	
	1N	—	12 VDC	
	1P	●	48 VAC	Conduit (With surge voltage suppressor)
	1Q	●	220 VAC	
	1R	●	240 VAC	
	1Y	●	24 VAC	
	1S	—	12 VDC	
	1T	—	12 VDC	Flat terminal
With light	2A	●	24 VDC	DIN terminal (With surge voltage suppressor)
	2B	●	100 VAC	
	2C	●	110 VAC	
	2D	●	200 VAC	
	2E	●	230 VAC	
	2F	●	48 VAC	
	2G	●	220 VAC	
	2H	●	240 VAC	
	2V	●	24 VAC	
	2J	—	12 VDC	
	2K	—	24 VDC	Conduit terminal (With surge voltage suppressor)
	2L	●	100 VAC	
	2M	●	110 VAC	
	2N	●	200 VAC	
	2P	●	230 VAC	
	2Q	●	48 VAC	
	2R	●	220 VAC	
	2S	●	240 VAC	
	2W	●	24 VAC	
	2T	—	12 VDC	
Without DIN connector	3A	—	24 VDC	DIN terminal (With surge voltage suppressor)
	3B	—	100 VAC	
	3C	—	110 VAC	
	3D	—	200 VAC	
	3E	—	230 VAC	
	3F	—	48 VAC	
	3G	—	220 VAC	
	3H	—	240 VAC	
	3V	—	24 VAC	
	3J	—	12 VDC	

∗ Options marked with ● are available for Class "H" coil.
Applicable for all when the coil insulation class is Class "B".

Other Options

Low concentration ozone resistant and applicable to deionized water
Oil-free
Port thread

VX2 1 0 A A Z

- **Enter standard product number.**
- **Other option**

Low concentration ozone resistant and applicable to deionized water/ Oil-free/Port thread

Symbol	Low concentration ozone resistant and applicable to deionized water*1 (Seal material: FKM)	Oil-free	Port thread
Nil	—	—	Rc, One-touch fitting*2
A	—	—	G
B			NPT
C	○	—	Rc, One-touch fitting*2
D	—	○	G
E			NPT
F	○	—	G
G			NPT
H	○	○	Rc, One-touch fitting*2
K			G
L			NPT
Z	—	○	Rc, One-touch fitting*2

∗1 Applicable to air (VX2□0) and water (VX2□2).
∗2 When the body is resin, One-touch fittings are equipped.

∗ Enter symbols in the order below when ordering a combination of electrical option, other option, etc.

Example) **VX2 1 2 A Z 1A Z**

- **Electrical option**
- **Other option**

Installation Options
(Mounting Option/Special Electrical Entry Direction)

The following shows combinations that can be selected using installation options.

Combinations

Symbol	Special electrical entry direction	With bracket	Mounting holes on the bottom side of the body	Seal material: EPDM
XC□	●			●
XB□	●	●		●
XNB□	●		●	●
X332□	●	●	●	●

Special Electrical Entry Direction

VX2 □□□□ XC A

Enter standard product number.

Special electrical entry direction

Symbol	Electrical entry direction: Single unit	Electrical entry direction: Manifold
A	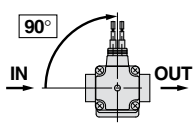	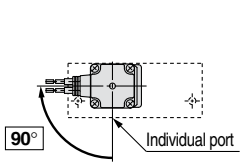
B	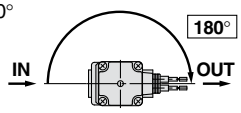	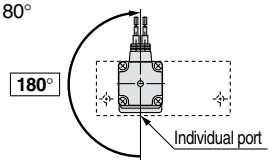
C	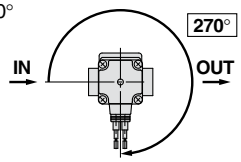	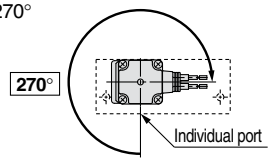

∗ Enter symbols in the order below when ordering a combination of electrical option, other option and special electrical entry direction.

Example) **VX2 1 2 A Z 1A Z XC A**

Electrical option ● **Other option** ● ● **Special electrical entry direction**

∗ Enter symbols in the order below when ordering a combination of electrical option, other option and with bracket.

Example) **VX2 1 2 A Z 1A Z XB A**

Electrical option ● **Other option** ● ● **With bracket/Special electrical entry direction**

With Bracket/ Special Electrical Entry Direction

VX2 □□□□ XB A

Enter standard product number.

With bracket/Special electrical entry direction

Symbol	Electrical entry direction	Symbol	Electrical entry direction
Nil	Standard 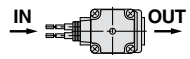	C	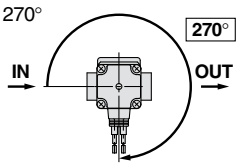
A	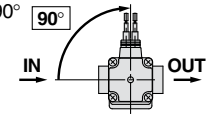		
B	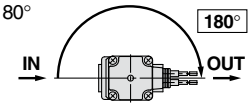		

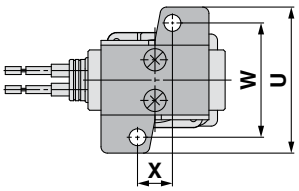

(mm)

Size	Port size	U	W	X
1	1/8, 1/4	46	36	11
2	1/4, 3/8	56	46	13
3	1/4, 3/8	56	46	13
	1/2	—	—	—

∗1 Bracket is attached as standard with the resin body, so there are no XB settings.
∗2 When the orifice is ø8, ø10, and the body port size is 1/4 or 3/8, use a foot type bracket. (The L-bracket of the old VX series is not compatible.) If the body port size is 1/2, there are no XB settings. (Refer to the following.)
∗3 On the bottom side of the standard body, there is no female thread for mounting a bracket. Please be careful because the bracket cannot be retrofit.
∗4 Bracket is packed in the same container as the main body.

Bracket Interchangeable with an Old Type

Size	Port size	Orifice diameter (mmø)	Bracket interchangeable with an old type
1	1/8, 1/4	2	● (Interchangeable)
		3	● (Interchangeable)
		5	● (Interchangeable)
2	1/4, 3/8	4	● (Interchangeable)
		7	● (Interchangeable)
3	1/4, 3/8	5	● (Interchangeable)
		8	× (Not interchangeable)∗2
		10	× (Not interchangeable)∗2
	1/2	10	— (Not available)∗2

Installation Options
(Mounting Option/Special Electrical Entry Direction)

Mounting Holes on the Bottom Side of the Body/ Special Electrical Entry Direction

VX2 □□□□ XNB A

Enter standard product number.

Mounting holes on the bottom side of the body/ Special electrical entry direction

Symbol	Electrical entry direction	Symbol	Electrical entry direction
Nil	Standard IN OUT	**C**	270° IN OUT 270°
A	90° 90° IN OUT		
B	180° 180° IN OUT		

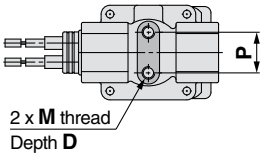

(mm)

Size	Port size	M	D	P
1	1/8, 1/4	M4	6	12.8
2	1/4, 3/8	M5	8	19
3	1/4, 3/8	M5	8	19
	1/2	M5	8	23

Note) Resin body is not available.

∗ Enter symbols in the order below when ordering a combination of electrical option, other option and mounting holes on the bottom side of the body.

Example) **VX2 1 2 A Z 1A Z XNB A**

- **Electrical option** — 1A
- **Other option** — Z
- **Mounting holes on the bottom side of the body/ Special electrical entry direction** — A

Seal Material: EPDM/With Bracket/ Mounting Holes on the Bottom Side of the Body/ Special Electrical Entry Direction

VX2 □□□□ X332 A

Enter standard product number.

Seal material: EPDM

When the fluid is oil, enter the part number for water (VX2□2).

∗ **VX2 □3□□ → VX2 □2□□**

Refer to page 15 for model selection.

With bracket/Mounting holes on the bottom side of the body/ Special electrical entry direction

Symbol	Specifications	
	Electrical entry direction	Bracket
Nil	IN side (Standard)	None
A	90°	
B	180°	
C	270°	
D	IN side (Standard)	With bracket∗1
E	90°	
F	180°	
G	270°	
H	IN side (Standard)	Mounting holes on the bottom side of the body∗1
J	90°	
K	180°	
L	270°	

∗1 Resin body is not available.
∗2 "Other Options", which can be combined, are A, B, D, E, Z.
∗3 Electrical entry direction

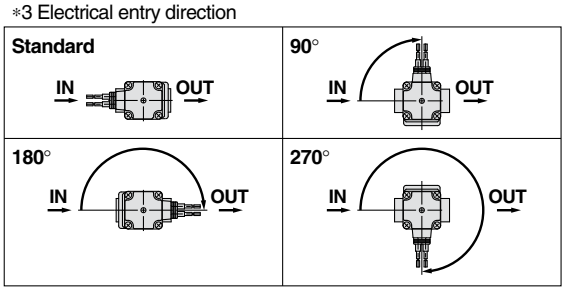

∗ Enter symbols in the order below when ordering a combination of electrical option, other option, seal material: EPDM, with bracket, mounting holes on the bottom side of the body and special electrical entry direction.

Example) **VX2 1 2 A Z 1A Z X332 A**

- **Electrical option** — 1A
- **Other option** — Z
- **Seal material: EPDM/ With bracket/Mounting holes on the bottom side of the body/ Special electrical entry direction** — A

Series VX21/22/23
UL-compliant

∗ Refer to the table shown below for UL-compliant.

Refer to pages 21 to 23 for electrical options, other options, and bracket/electrical entry direction.

For Air

VX210 Valve type: N.C.

Size, Valve type, Fluid	Body material	Voltage, Electrical entry, Electrical options	Other options	With Note) bracket
VX210	**A**	**A**	**Nil**	**Nil**
	B	**B**	**A**	**XB**
	C	**C**	**B**	
	D	**D**	**C**	
	E	**E**	**D**	
	F	**F**	**E**	
	H Note)	**M**	**F**	
	J Note)	**N**	**G**	
	K Note)	**P**	**H**	
	L Note)	**Q**	**K**	
	M Note)	**R**	**L**	
	N Note)	**S**	**Z**	
		T		
		U		
		V		
		W		
		Y		
		Z1A		
		Z1B		
		Z1C		
		Z1U		
		Z1D		
		Z1E		
		Z1K		
		Z1L		
		Z1M		
		Z1W		
		Z1N		
		Z1P		
		Z1Q		
		Z1R		
		Z1Y		
		Z1S		
		Z1T		
		Z2K		
		Z2L		
		Z2M		
		Z2N		
		Z2P		
		Z2Q		
		Z2R		
		Z2S		
		Z2W		
		Z2T		
		Z3A		
		Z3B		
		Z3C		
		Z3D		
		Z3E		
		Z3F		
		Z3G		
		Z3H		
		Z3V		
		Z3J		

Note) Since the bracket is attached to the resin body type H, J, K, L, M, N, "XB" cannot be selected.

VX220 Valve type: N.C.

Size, Valve type, Fluid	Body material	Voltage, Electrical entry, Electrical options	Other options	With Note) bracket
VX220	**A**	**A**	**Nil**	**Nil**
	B	**B**	**A**	**XB**
	D	**C**	**B**	
	E	**D**	**C**	
	H Note)	**E**	**D**	
	J Note)	**F**	**E**	
	L Note)	**M**	**F**	
	M Note)	**N**	**G**	
		P	**H**	
		Q	**K**	
		R	**L**	
		S	**Z**	
		T		
		U		
		V		
		W		
		Y		
		Z1A		
		Z1B		
		Z1C		
		Z1U		
		Z1D		
		Z1E		
		Z1K		
		Z1L		
		Z1M		
		Z1W		
		Z1N		
		Z1P		
		Z1Q		
		Z1R		
		Z1Y		
		Z1S		
		Z1T		
		Z2K		
		Z2L		
		Z2M		
		Z2N		
		Z2P		
		Z2Q		
		Z2R		
		Z2S		
		Z2W		
		Z2T		
		Z3A		
		Z3B		
		Z3C		
		Z3D		
		Z3E		
		Z3F		
		Z3G		
		Z3H		
		Z3V		
		Z3J		

Note) Since the bracket is attached to the resin body type H, J, L, M, "XB" cannot be selected.

VX230 Valve type: N.C.

Size, Valve type, Fluid	Body material	Voltage, Electrical entry, Electrical options	Other options	With Note) bracket
VX230	**A**	**A**	**Nil**	**Nil**
	B	**B**	**A**	**XB**
	C	**C**	**B**	
	D	**D**	**C**	
	E	**E**	**D**	
	F	**F**	**E**	
	G	**M**	**F**	
	H Note)	**N**	**G**	
	J Note)	**P**	**H**	
	K Note)	**Q**	**K**	
	L Note)	**R**	**L**	
	M Note)	**S**	**Z**	
	N Note)	**T**		
		U		
		V		
		W		
		Y		
		Z1A		
		Z1B		
		Z1C		
		Z1U		
		Z1D		
		Z1E		
		Z1K		
		Z1L		
		Z1M		
		Z1W		
		Z1N		
		Z1P		
		Z1Q		
		Z1R		
		Z1Y		
		Z1S		
		Z1T		
		Z2K		
		Z2L		
		Z2M		
		Z2N		
		Z2P		
		Z2Q		
		Z2R		
		Z2S		
		Z2W		
		Z2T		
		Z3A		
		Z3B		
		Z3C		
		Z3D		
		Z3E		
		Z3F		
		Z3G		
		Z3H		
		Z3V		
		Z3J		

Note) Since the bracket is attached to the resin body type H, J, K, L, M, N, "XB" cannot be selected.

Refer to pages 21 to 23 for electrical options, other options, and bracket/electrical entry direction.

For Water

VX212 Valve type: N.C.

Size, Valve type, Fluid	Body material	Voltage, Electrical entry, Electrical options	Other options	With bracket
VX212	A	A	Nil	Nil
	B	B	A	XB
	C	C	B	
	D	D	C	
	E	E	D	
	F	F	E	
	H	M	F	
	J	N	G	
	K	P	H	
	L	Q	K	
	M	R	L	
	N	S	Z	
		T		
		U		
		V		
		W		
		Y		
		Z1A		
		Z1B		
		Z1C		
		Z1U		
		Z1D		
		Z1E		
		Z1K		
		Z1L		
		Z1M		
		Z1W		
		Z1N		
		Z1P		
		Z1Q		
		Z1R		
		Z1Y		
		Z1S		
		Z1T		
		Z2K		
		Z2L		
		Z2M		
		Z2N		
		Z2P		
		Z2Q		
		Z2R		
		Z2S		
		Z2W		
		Z2T		
		Z3A		
		Z3B		
		Z3C		
		Z3D		
		Z3E		
		Z3F		
		Z3G		
		Z3H		
		Z3V		
		Z3J		

VX222 Valve type: N.C.

Size, Valve type, Fluid	Body material	Voltage, Electrical entry, Electrical options	Other options	With bracket
VX222	A	A	Nil	Nil
	B	B	A	XB
	D	C	B	
	E	D	C	
	H	E	D	
	J	F	E	
	L	M	F	
	M	N	G	
		P	H	
		Q	K	
		R	L	
		S	Z	
		T		
		U		
		V		
		W		
		Y		
		Z1A		
		Z1B		
		Z1C		
		Z1U		
		Z1D		
		Z1E		
		Z1K		
		Z1L		
		Z1M		
		Z1W		
		Z1N		
		Z1P		
		Z1Q		
		Z1R		
		Z1Y		
		Z1S		
		Z1T		
		Z2K		
		Z2L		
		Z2M		
		Z2N		
		Z2P		
		Z2Q		
		Z2R		
		Z2S		
		Z2W		
		Z2T		
		Z3A		
		Z3B		
		Z3C		
		Z3D		
		Z3E		
		Z3F		
		Z3G		
		Z3H		
		Z3V		
		Z3J		

VX232 Valve type: N.C.

Size, Valve type, Fluid	Body material	Voltage, Electrical entry, Electrical options	Other options	With bracket
VX232	A	A	Nil	Nil
	B	B	A	XB
	C	C	B	
	D	D	C	
	E	E	D	
	F	F	E	
	G	M	F	
	H	N	G	
	J	P	H	
	K	Q	K	
	L	R	L	
	M	S	Z	
	N	T		
	P	U		
		V		
		W		
		Y		
		Z1A		
		Z1B		
		Z1C		
		Z1U		
		Z1D		
		Z1E		
		Z1K		
		Z1L		
		Z1M		
		Z1W		
		Z1N		
		Z1P		
		Z1Q		
		Z1R		
		Z1Y		
		Z1S		
		Z1T		
		Z2K		
		Z2L		
		Z2M		
		Z2N		
		Z2P		
		Z2Q		
		Z2R		
		Z2S		
		Z2W		
		Z2T		
		Z3A		
		Z3B		
		Z3C		
		Z3D		
		Z3E		
		Z3F		
		Z3G		
		Z3H		
		Z3V		
		Z3J		

Construction/Single Unit

Normally Closed (N.C.)
Body material: Aluminum, C37, Stainless steel

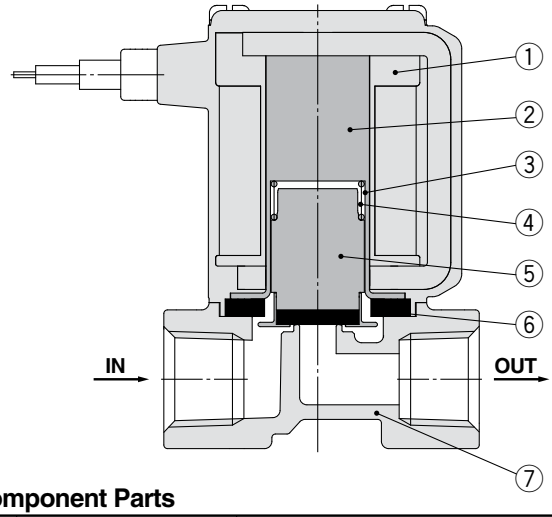

Component Parts

No.	Description	Material
1	**Solenoid coil**	Cu + Fe + Resin
2	**Core**	Fe
3	**Tube**	Stainless steel
4	**Spring**	Stainless steel
5	**Armature assembly**	NBR, FKM, Stainless steel
6	**Seal**	NBR, FKM
7	**Body**	Aluminum, C37, Stainless steel

Body material: Resin

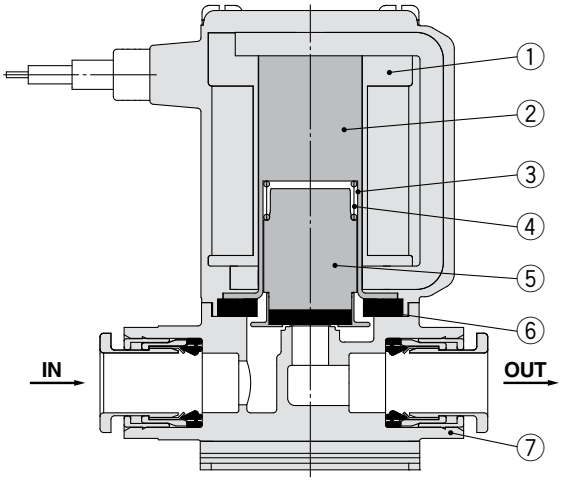

Component Parts

No.	Description	Material
1	**Solenoid coil**	Cu + Fe + Resin
2	**Core**	Fe
3	**Tube**	Stainless steel
4	**Spring**	Stainless steel
5	**Armature assembly**	NBR, FKM, Stainless steel
6	**Seal**	NBR, FKM
7	**Body**	Resin (PBT)

Normally Open (N.O.)
Body material: Aluminum, C37, Stainless steel

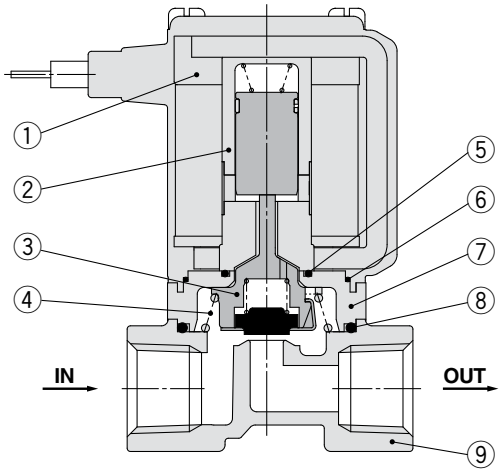

Component Parts

No.	Description	Material
1	**Solenoid coil**	Cu + Fe + Resin
2	**Sleeve assembly**	Stainless steel, Resin (PPS)
3	**Push rod assembly**	Resin (PPS), Stainless steel, NBR, FKM
4	**Spring**	Stainless steel
5	**O-ring A**	NBR, FKM
6	**O-ring B**	NBR, FKM
7	**Adapter**	Resin (PPS)
8	**O-ring C**	NBR, FKM
9	**Body**	Aluminum, C37, Stainless steel

Body material: Resin

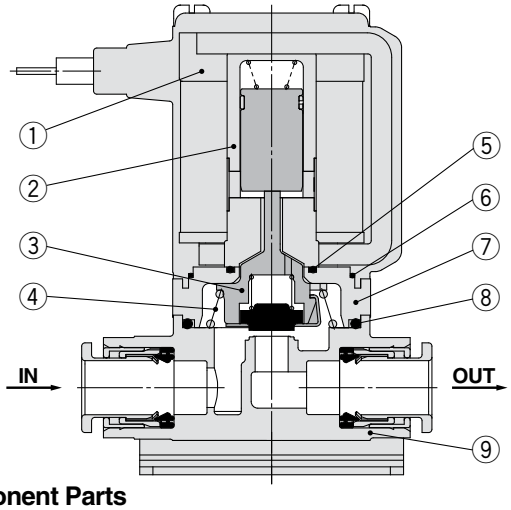

Component Parts

No.	Description	Material
1	**Solenoid coil**	Cu + Fe + Resin
2	**Sleeve assembly**	Stainless steel, Resin (PPS)
3	**Push rod assembly**	Resin (PPS), Stainless steel, NBR, FKM
4	**Spring**	Stainless steel
5	**O-ring A**	NBR, FKM
6	**O-ring B**	NBR, FKM
7	**Adapter**	Resin (PPS)
8	**O-ring C**	NBR, FKM
9	**Body**	Resin (PBT)

Construction/Manifold

Normally Closed (N.C.)

Base material: Aluminum

Common SUP type (for air)

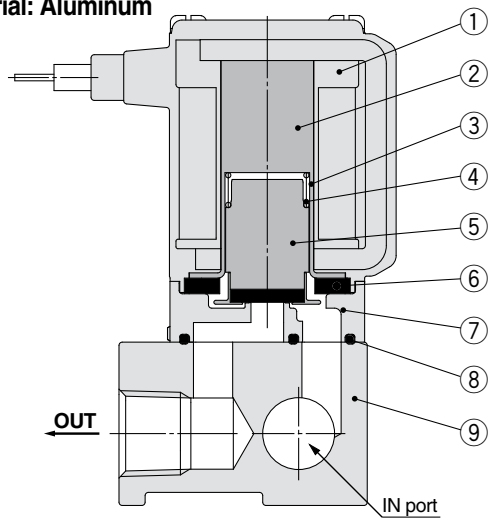

Individual SUP type (for medium vacuum)

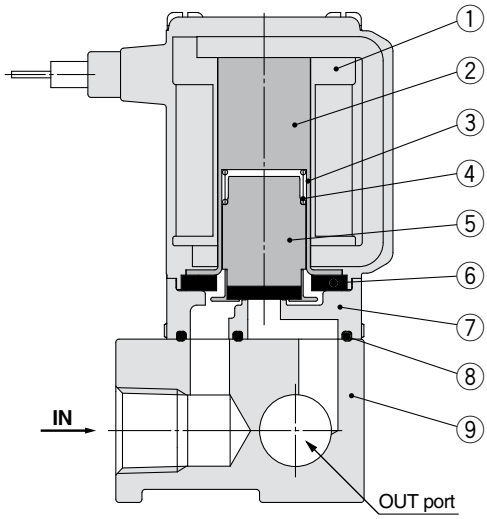

Component Parts

No.	Description	Material
1	**Solenoid coil**	Cu + Fe + Resin
2	**Core**	Fe
3	**Tube**	Stainless steel
4	**Spring**	Stainless steel
5	**Armature assembly**	NBR, FKM, Stainless steel
6	**Seal**	NBR, FKM
7	**Body**	Resin (PPS)
8	**Gasket**	NBR, FKM
9	**Base**	Aluminum

Normally Open (N.O.)

Base material: Aluminum

Common SUP type (for air)

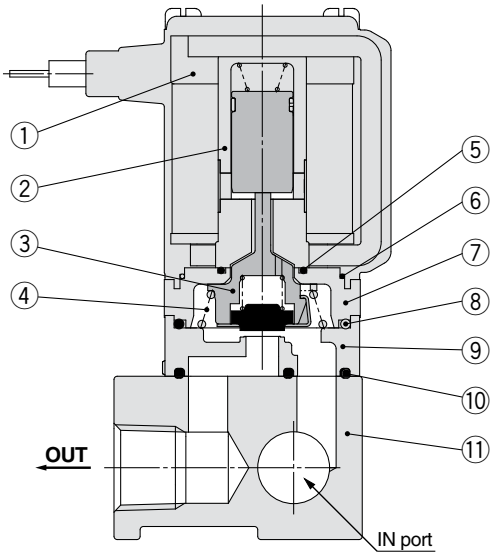

Individual SUP type (for medium vacuum)

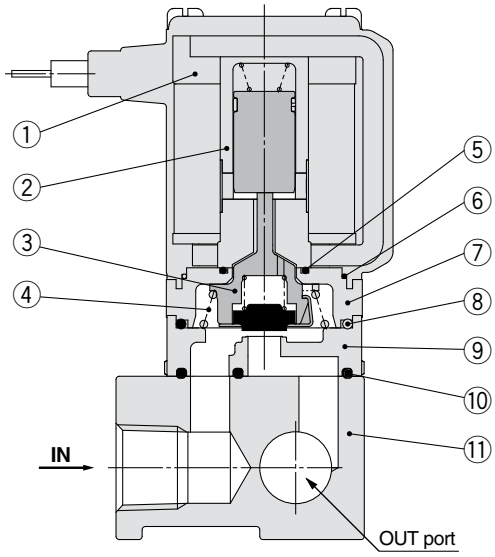

Component Parts

No.	Description	Material
1	**Solenoid coil**	Cu + Fe + Resin
2	**Sleeve assembly**	Stainless steel, Resin (PPS)
3	**Push rod assembly**	Resin (PPS), Stainless steel, NBR, FKM
4	**Spring**	Stainless steel
5	**O-ring A**	NBR, FKM
6	**O-ring B**	NBR, FKM
7	**Adapter**	Resin (PPS)
8	**O-ring C**	NBR, FKM
9	**Body**	Resin (PPS)
10	**Gasket**	NBR, FKM
11	**Base**	Aluminum

For Air

Dimensions/Body Material: Aluminum

Grommet

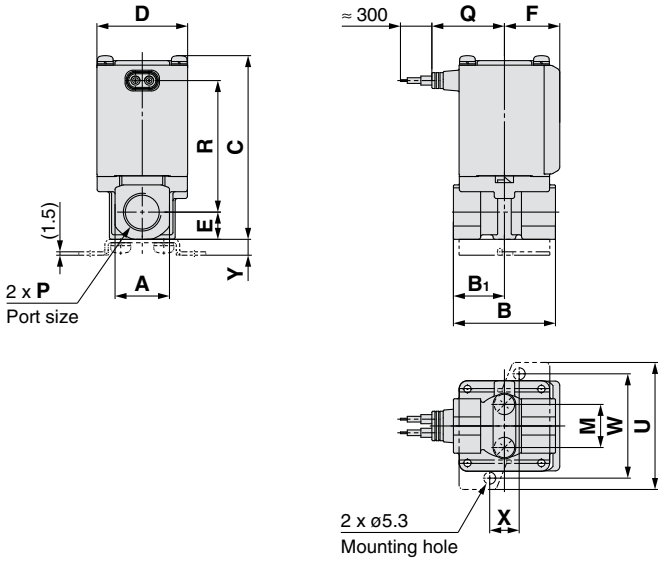

Grommet (with surge voltage suppressor)

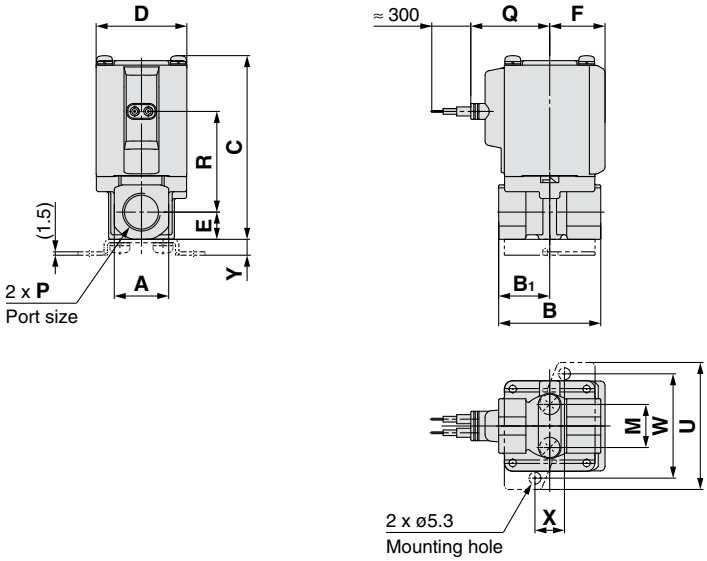

DIN terminal

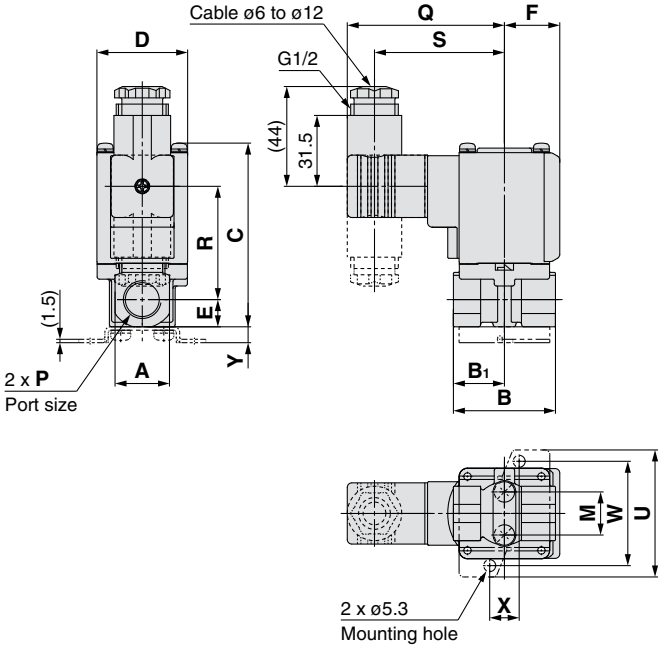

Conduit terminal

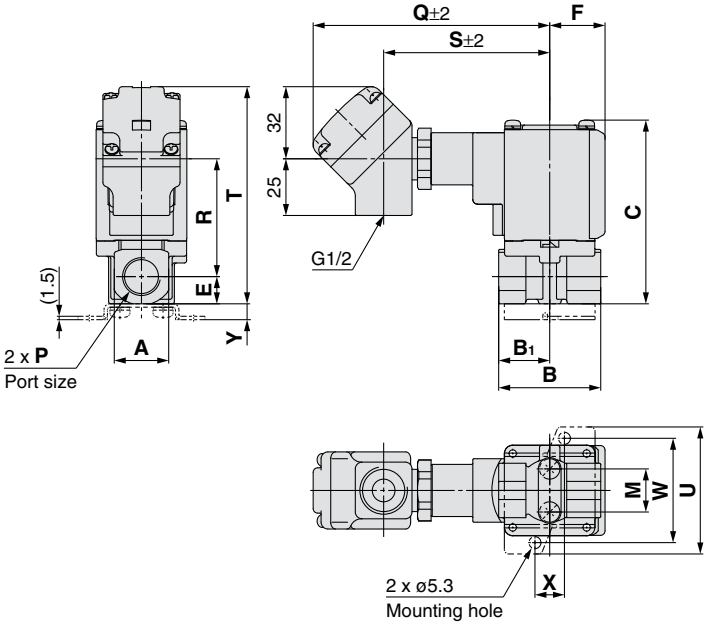

(mm)

Size	Port size P	A	B	B1	C	D	E	F	Mounting bracket dimensions				
									M	U	W	X	Y
1	1/8, 1/4	19	43	21	61 (67)	30	9.5	20	12.8	46	36	11	6
2	1/4, 3/8	24	45	22.5	76 (84)	35	12	22	19	56	46	13	7
3	1/4, 3/8	24	45	22.5	81 (89)	40	12	24.5	19	56	46	13	7
	1/2	30	50	25	86.5	40	15	24.5	—	—	—	—	—

Size	Port size P	Electrical entry										
		Grommet		Grommet (with surge voltage suppressor)		DIN terminal			Conduit terminal			
		Q	R	Q	R	Q	R	S	Q	R	S	T
1	1/8, 1/4	27	42 (47.5)	30	28.5 (34)	64.5	34 (39.5)	52.5	99.5	36 (41.5)	68.5	77 (83)
2	1/4, 3/8	29.5	53.5 (61.5)	32.5	39.5 (47.5)	67	45 (53)	55	102	47 (55)	71	91 (99)
3	1/4, 3/8	32	58 (66)	35	44.5 (52.5)	69.5	50 (58)	57.5	104.5	52 (60)	73.5	96 (104)
	1/2	32	61	35	47.5	69.5	53	57.5	104.5	55	73.5	101.5

( ): Denotes the Normally Open (N.O.) dimensions.

Dimensions/Body Material: Aluminum

Conduit

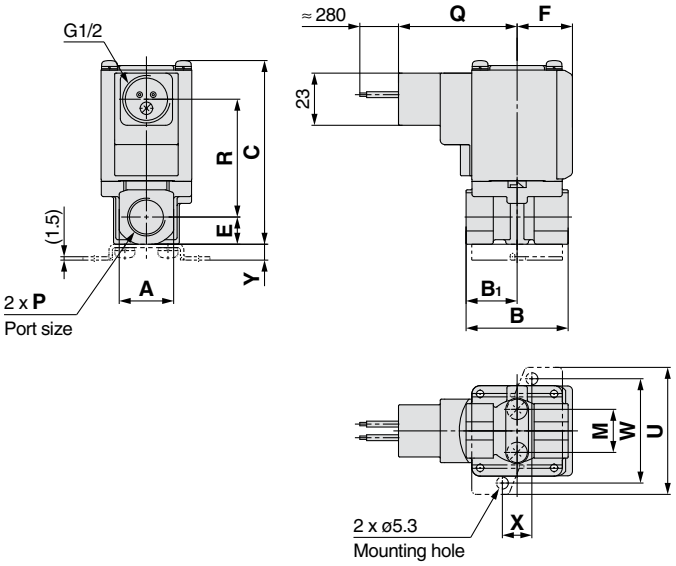

Flat terminal type

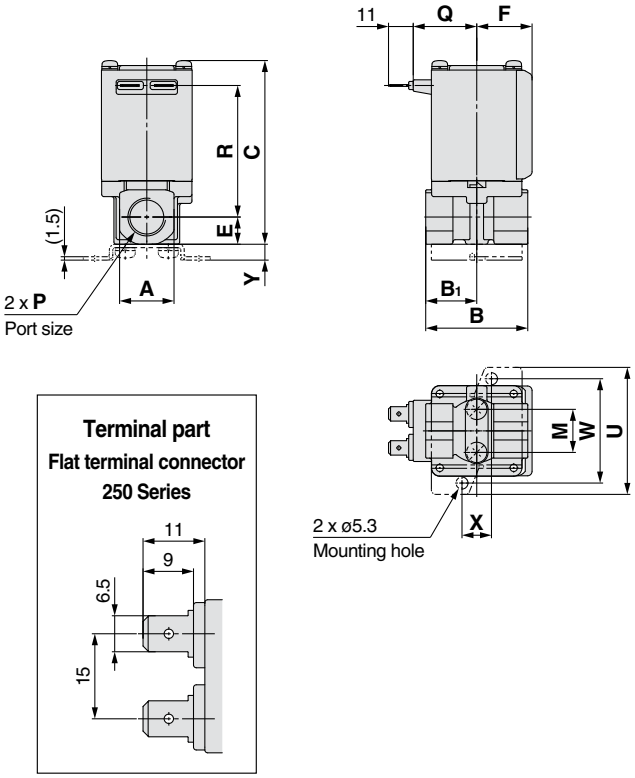

(mm)

Size	Port size P	A	B	B_1	C	D	E	F	Mounting bracket dimensions				
									M	U	W	X	Y
1	1/8, 1/4	19	43	21	61 (67)	30	9.5	20	12.8	46	36	11	6
2	1/4, 3/8	24	45	22.5	76 (84)	35	12	22	19	56	46	13	7
3	1/4, 3/8	24	45	22.5	81 (89)	40	12	24.5	19	56	46	13	7
	1/2	30	50	25	86.5	40	15	24.5	—	—	—	—	—

Size	Port size P	Electrical entry			
		Conduit		Flat terminal type	
		Q	R	Q	R
1	1/8, 1/4	47.5	36 (41.5)	23	42 (47.5)
2	1/4, 3/8	50	47 (55)	25.5	53.5 (61.5)
3	1/4, 3/8	52.5	52 (60)	28	58 (66)
	1/2	52.5	55	28	61

( ): Denotes the Normally Open (N.O.) dimensions.

For Air

Dimensions/Body Material: Resin

Grommet

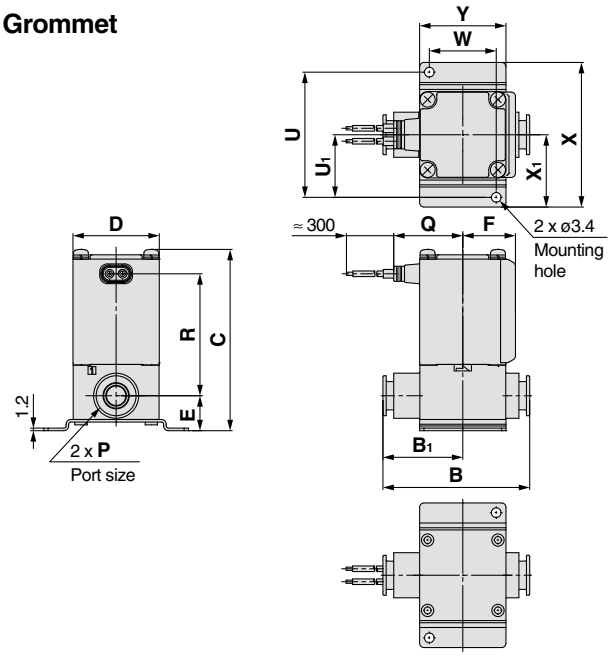

Grommet (with surge voltage suppressor)

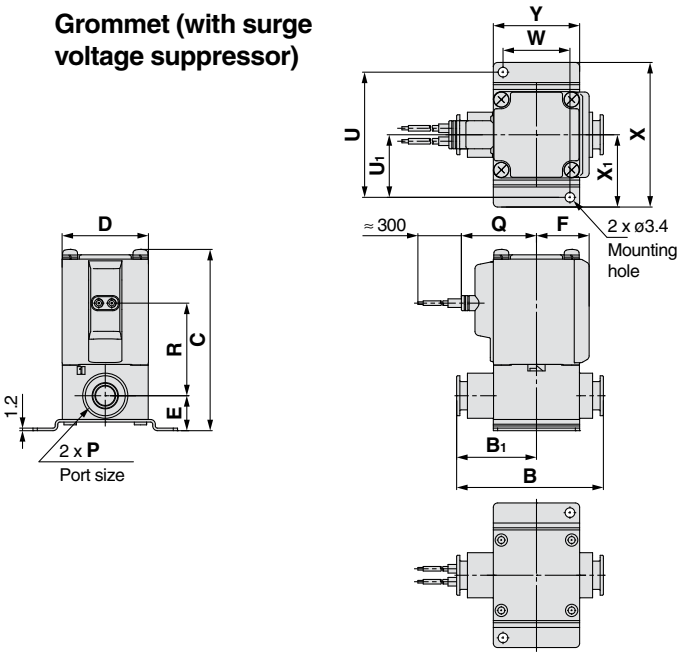

DIN terminal

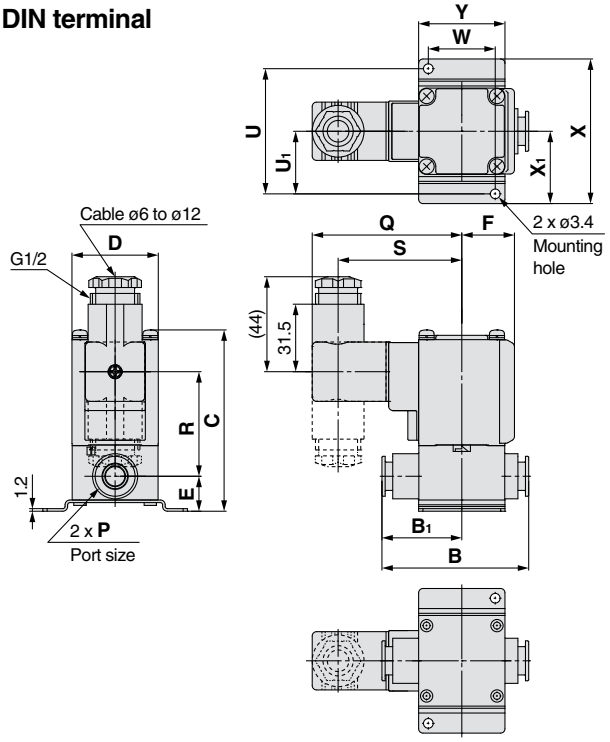

Conduit terminal

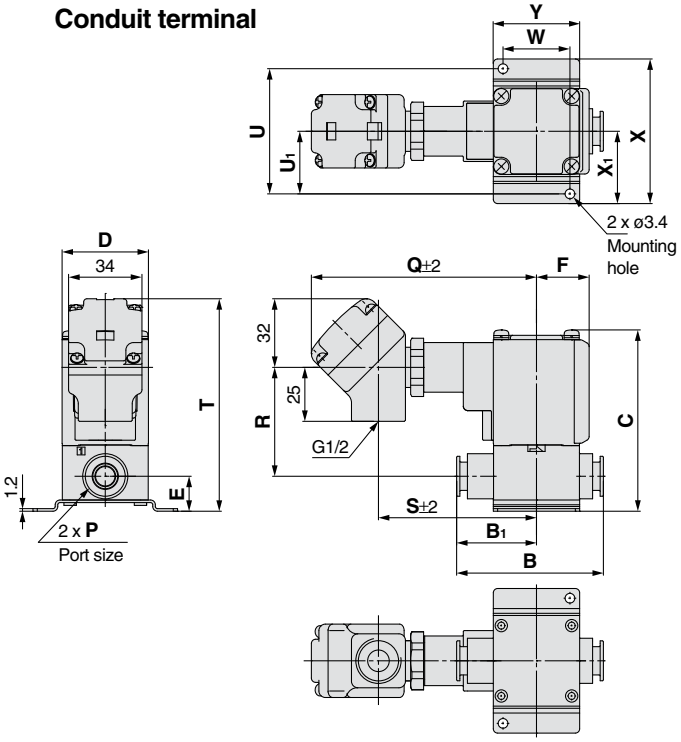

(mm)

Size	One-touch fitting **P**	B	B_1	C	D	E	F	Mounting bracket dimensions					
								U	U_1	W	X	X_1	Y
1	ø6, ø8	53.5	29	65.5 (71.5)	30	13.5	20	45	22.5	22	52	26	30
2	ø8, ø10	66	36	76.5 (84.5)	35	15	22	53	26.5	27	62	31	35
3	ø10, ø12	68	37	84 (92)	40	16.5	24.5	58	29	31	67	33.5	40

Size	One-touch fitting **P**	Electrical entry										
		Grommet		Grommet (with surge voltage suppressor)		DIN terminal			Conduit terminal			
		Q	R	Q	R	Q	R	S	Q	R	S	T
1	ø6, ø8	27	42.5 (48)	30	29 (34.5)	64.5	34.5 (40)	52.5	99.5	36.5 (42)	68.5	81.5 (87)
2	ø8, ø10	29.5	51 (59)	32.5	37 (45)	67	43 (50.5)	55	102	45 (52.5)	71	91.5 (99.5)
3	ø10, ø12	32	56.5 (64.5)	35	43 (51)	69.5	48.5 (56.5)	57.5	104.5	50.5 (58.5)	73.5	98.5 (106.5)

( ): Denotes the Normally Open (N.O.) dimensions.

For information on handling One-touch fittings and appropriate tubing, refer to page 48 and KQ2 series One-touch fittings in Best Pneumatics No. 6.
The KQ2 series information can be downloaded from the following SMC website, http://www.smcworld.com

Dimensions/Body Material: Resin

Conduit

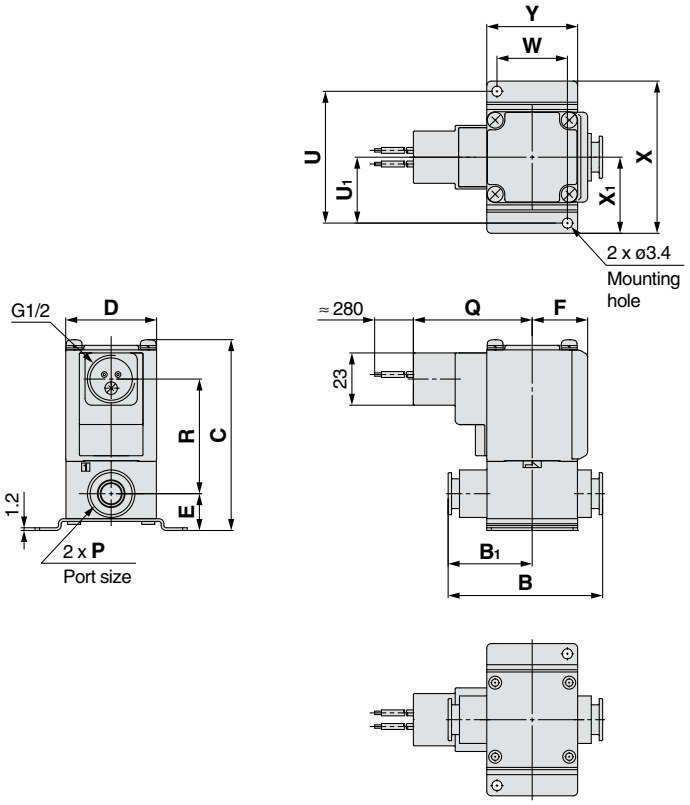

Flat terminal

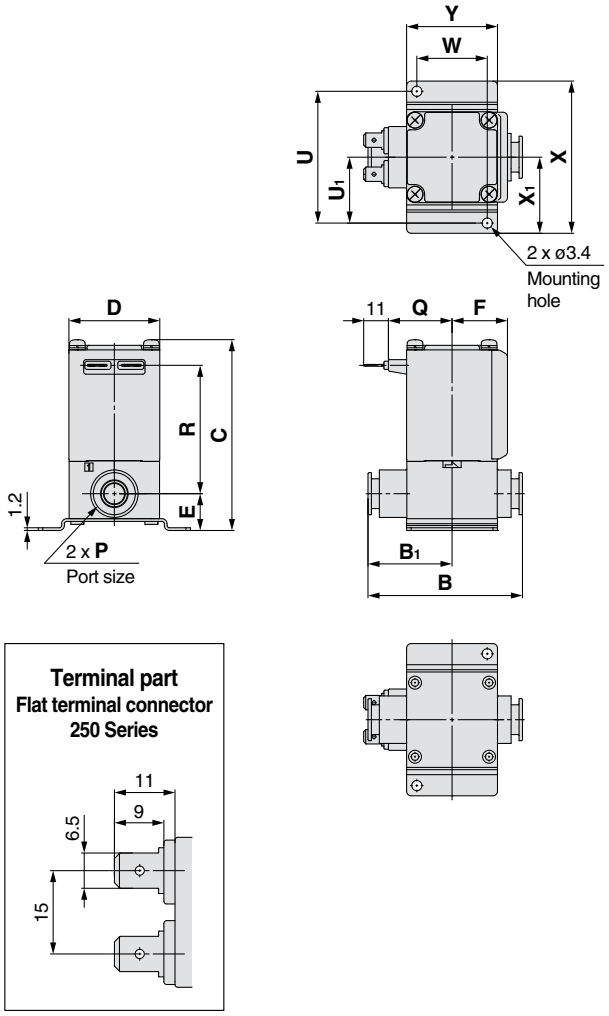

(mm)

Size	One-touch fitting **P**	B	B_1	C	D	E	F	Mounting bracket dimensions						Electrical entry			
														Conduit		Flat terminal	
								U	U_1	W	X	X_1	Y	Q	R	Q	R
1	ø6, ø8	53.5	29	65.5 (71.5)	30	13.5	20	45	22.5	22	52	26	30	47.5	36.5 (42)	23	42.5 (48)
2	ø8, ø10	66	36	76.5 (84.5)	35	15	22	53	26.5	27	62	31	35	50	45 (52.5)	25.5	51 (59)
3	ø10, ø12	68	37	84 (92)	40	16.5	24.5	58	29	31	67	33.5	40	52.5	50.5 (58.5)	28	56.5 (64.5)

( ): Denotes the Normally Open (N.O.) dimensions.

For Medium Vacuum, Water, Oil

Dimensions/Body Material: C37, Stainless Steel

Grommet

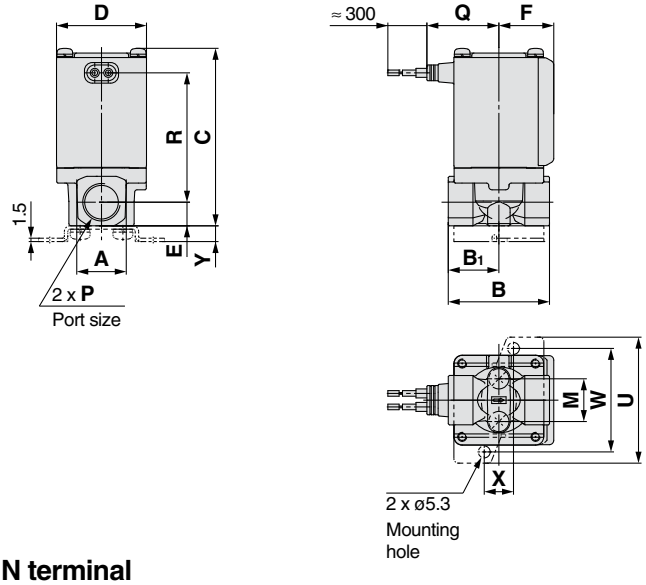

Grommet (with surge voltage suppressor)

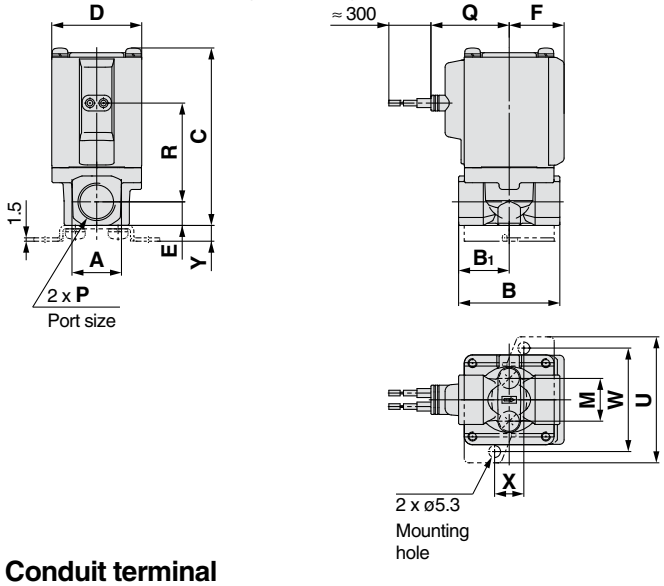

DIN terminal

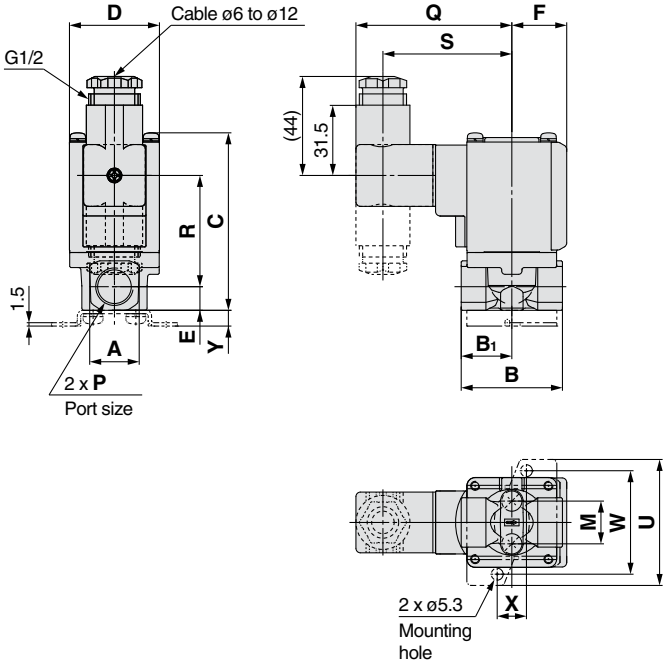

Conduit terminal

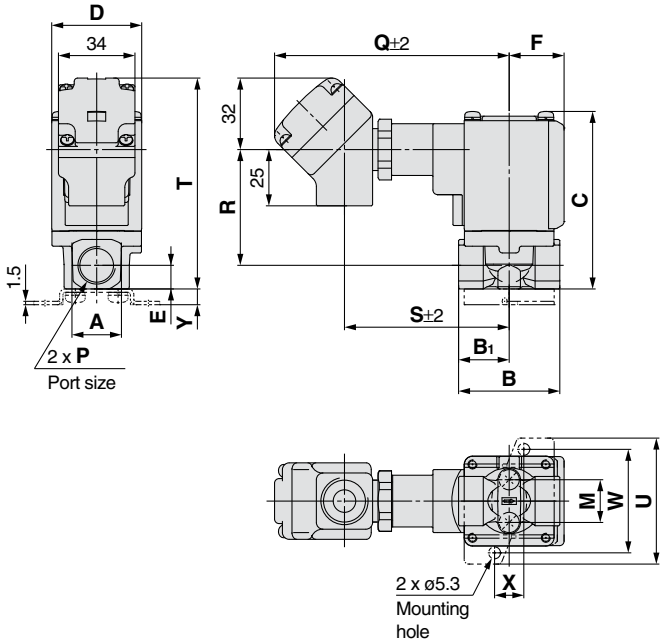

(mm)

Size	Port size P	A	B	B_1	C	D	E	F	Mounting bracket dimensions				
									M	U	W	X	Y
1	1/8, 1/4	19	43	21	61 (67)	30	9.5	20	12.8	46	36	11	6
2	1/4, 3/8	22	45	22.5	74.5 (82.5)	35	10.5	22	19	56	46	13	7
3	1/4, 3/8	22	45	22.5	79 (87)	40	10.5	24.5	19	56	46	13	7
	1/2	29.5	50	25	85.5	40	14	24.5	—	—	—	—	—

Size	Port size P	Electrical entry										
		Grommet		Grommet (with surge voltage suppressor)		DIN terminal			Conduit terminal			
		Q	R	Q	R	Q	R	S	Q	R	S	T
1	1/8, 1/4	27	42 (47.5)	30	28.5 (34)	64.5	34 (39.5)	52.5	99.5	36 (41.5)	68.5	77 (83)
2	1/4, 3/8	29.5	53.5 (61.5)	32.5	39.5 (47.5)	67	45 (53)	55	102	47 (55)	71	89.5 (97.5)
3	1/4, 3/8	32	57.5 (65.5)	35	44 (52)	69.5	49.5 (57.5)	57.5	104.5	51.5 (59.5)	73.5	94 (102)
	1/2	32	61	35	47.5	69.5	53	57.5	104.5	55	73.5	100.5

( ): Denotes the Normally Open (N.O.) dimensions.

Dimensions/Body Material: C37, Stainless Steel

Conduit

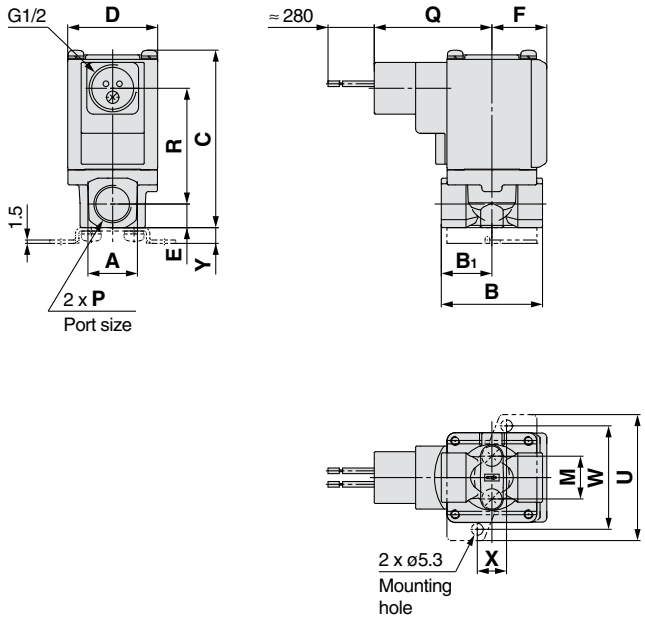

Flat terminal

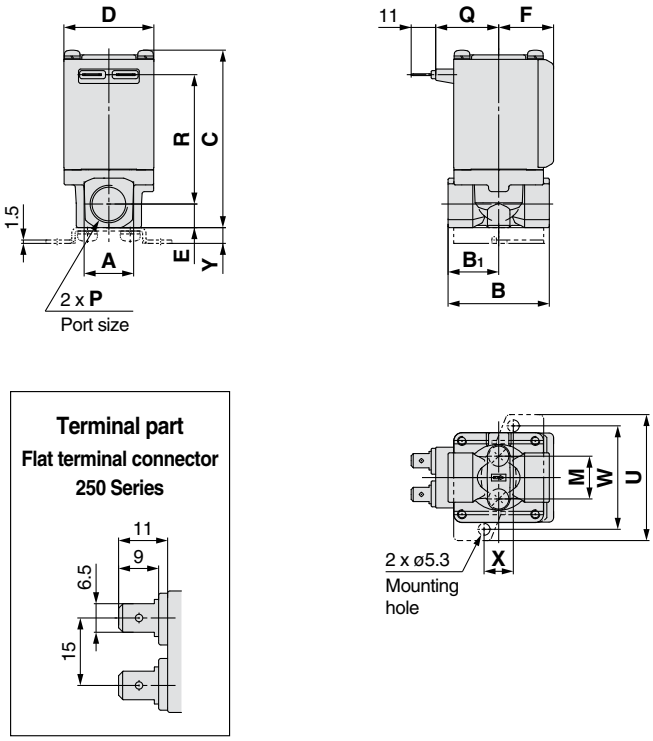

(mm)

Size	Port size P	A	B	B1	C	D	E	F	Mounting bracket dimensions				
									M	U	W	X	Y
1	1/8, 1/4	19	43	21	61 (67)	30	9.5	20	12.8	46	36	11	6
2	1/4, 3/8	22	45	22.5	74.5 (82.5)	35	10.5	22	19	56	46	13	7
3	1/4, 3/8	22	45	22.5	79 (87)	40	10.5	24.5	19	56	46	13	7
	1/2	29.5	50	25	85.5	40	14	24.5	—	—	—	—	—

Size	Port size P	Electrical entry			
		Conduit		Flat terminal	
		Q	R	Q	R
1	1/8, 1/4	47.5	36 (41.5)	23	42 (47.5)
2	1/4, 3/8	50	47 (55)	25.5	53.5 (61.5)
3	1/4, 3/8	52.5	51.5 (59.5)	28	57.5 (65.5)
	1/2	52.5	55	28	61

( ): Denotes the Normally Open (N.O.) dimensions.

For Steam
∗ Can be used with heated water.

Dimensions/Body Material: C37, Stainless Steel

Grommet

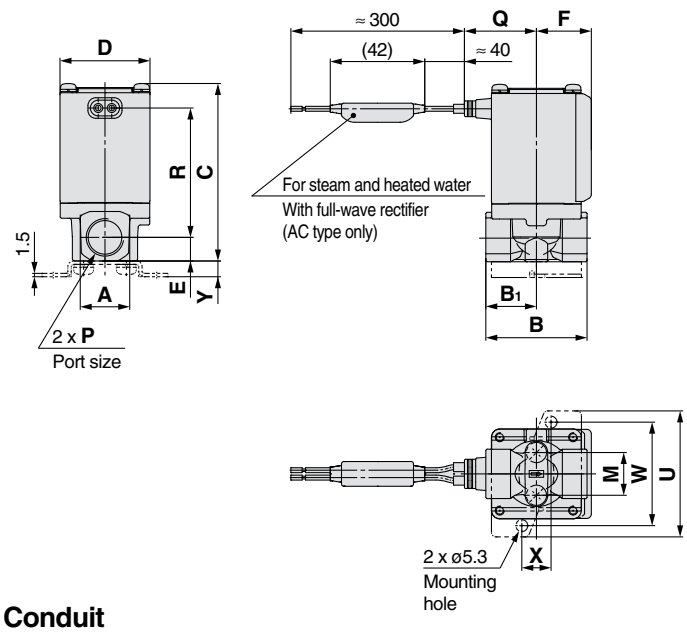

Conduit terminal

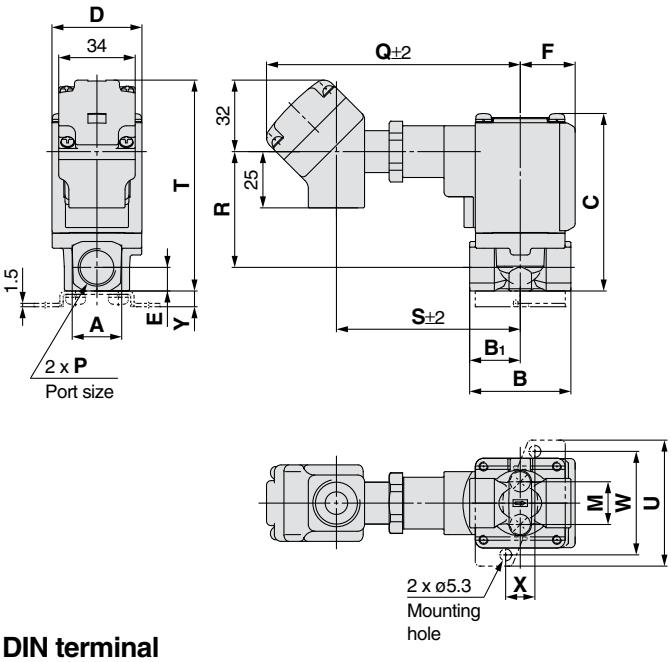

Conduit

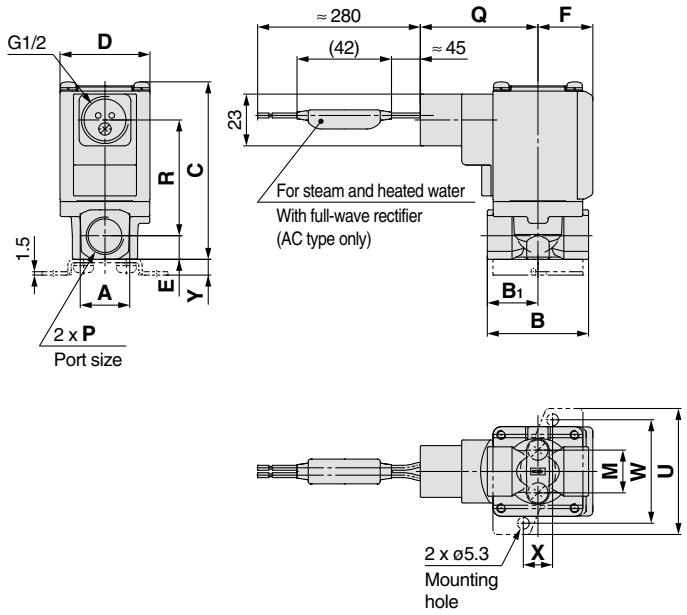

DIN terminal

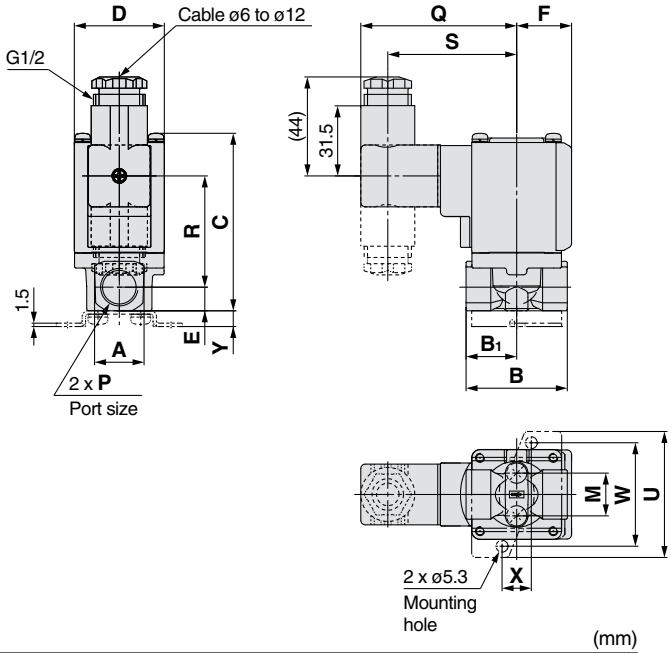

(mm)

Size	Port size P	A	B	B1	C	D	E	F	Mounting bracket dimensions				
									M	U	W	X	Y
1	1/8, 1/4	19	43	21	61 (67)	30	9.5	20	12.8	46	36	11	6
2	1/4, 3/8	22	45	22.5	74.5 (82.5)	35	10.5	22	19	56	46	13	7
3	1/4, 3/8	22	45	22.5	79 (87)	40	10.5	24.5	19	56	46	13	7
	1/2	29.5	50	25	85.5	40	14	24.5	—	—	—	—	—

Size	Port size P	Electrical entry										
		Grommet		Conduit terminal				Conduit		DIN terminal		
		Q	R	Q	R	S	T	Q	R	Q	R	S
1	1/8, 1/4	27	42 (47.5)	108	36 (41.5)	77	77 (83)	47.5	36 (41.5)	64.5	34 (39.5)	52.5
2	1/4, 3/8	29.5	53.5 (61.5)	110.5	47 (55)	79.5	89.5 (97.5)	50	47 (55)	67	45 (53)	55
3	1/4, 3/8	32	57.5 (65.5)	113	51.5 (59.5)	82	94 (102)	52.5	51.5 (59.5)	69.5	49.5 (57.5)	57.5
	1/2	32	61	113	55	82	100.5	52.5	55	69.5	53	57.5

( ): Denotes the Normally Open (N.O.) dimensions.
Flat terminal is not available for valves for steam and heated water.

Dimensions/Manifold/Base Material: Aluminum

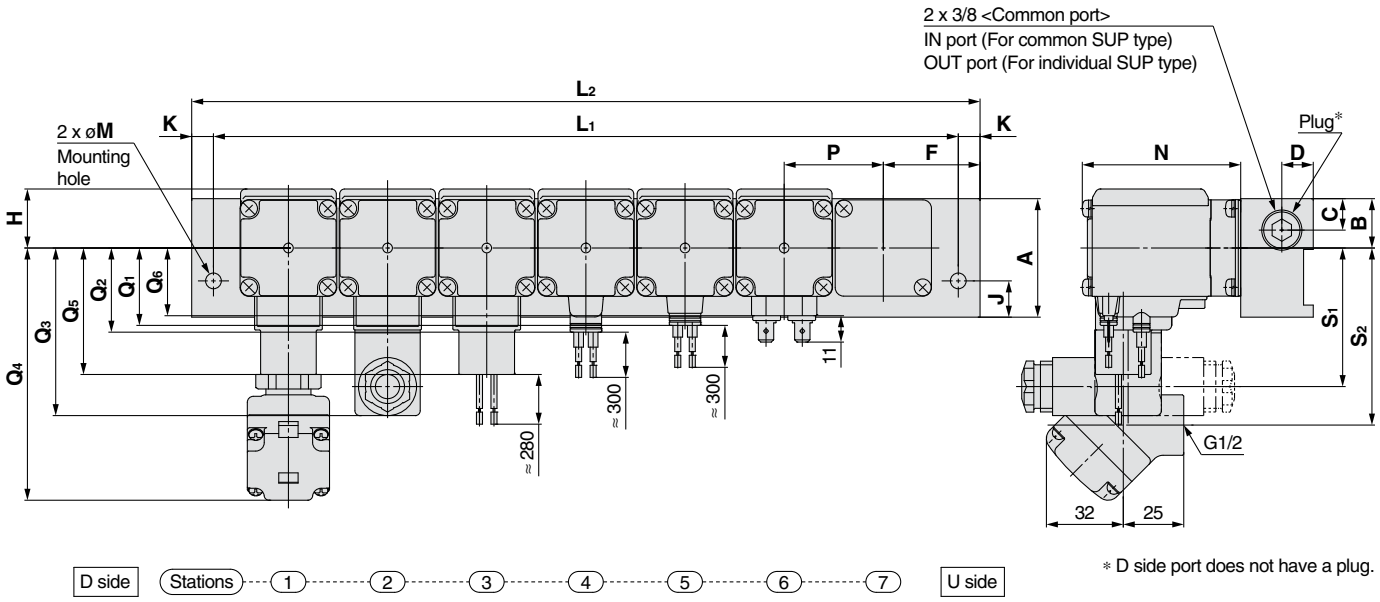

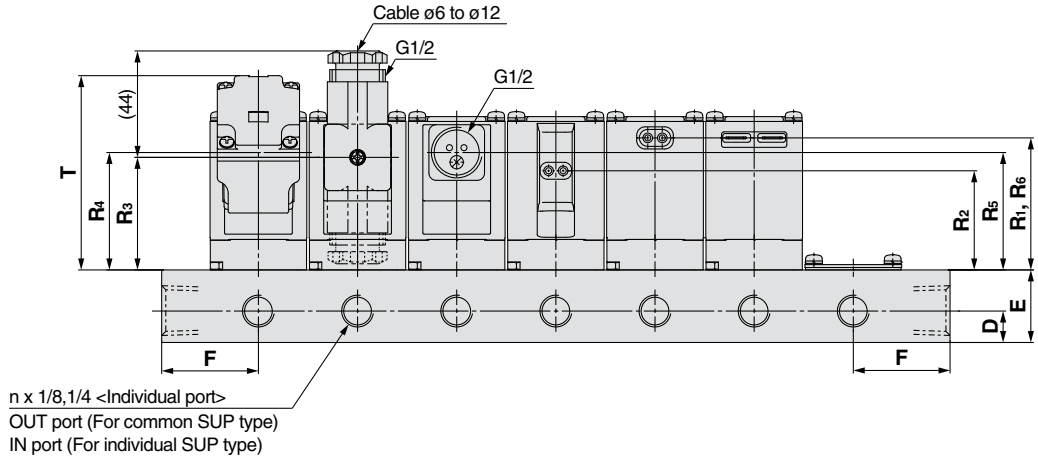

(mm)

Size	Dimensions	n (stations)								
		2	3	4	5	6	7	8	9	10
1	L_1	86	122	158	194	230	266	302	338	374
	L_2	100	136	172	208	244	280	316	352	388
2	L_1	90	126	162	198	234	270	306	342	378
	L_2	108	144	180	216	252	288	324	360	396
3	L_1	103	144	185	226	267	308	349	390	431
	L_2	121	162	203	244	285	326	367	408	449

Size	A	B	C	D	E	F	H	J	K	M	N	P
1	38	15.5	10.5	11	25	32	20	12	7	6.5	50.5 (56.5)	36
2	49	18	13	13	30	36	22	15	9	8.5	60.5 (68.5)	36
3	49	20.5	13	13	30	40	24.5	15	9	8.5	65.5 (73.5)	41

Size	Grommet		Grommet (With surge voltage suppressor)		DIN terminal*			Conduit terminal				Conduit		Flat terminal	
	Q_1	R_1	Q_2	R_2	Q_3	R_3	S_1	Q_4	R_4	S_2	T	Q_5	R_5	Q_6	R_6
1	27	40.5 (46.5)	30	27 (33)	64.5	32.5 (38.5)	52.5	99.5	34.5 (40.5)	68.5	66.5 (72)	47.5	34.5 (40.5)	23	40.5 (46.5)
2	29.5	49.5 (57.5)	32.5	36 (44)	67	41.5 (49.5)	55	102	43.5 (51.5)	71	75.5 (83.5)	50	43.5 (51.5)	25.5	49.5 (57.5)
3	32	54.5 (63)	35	41 (49)	69.5	46.5 (54.5)	57.5	104.5	48.5 (56.5)	73.5	80.5 (89.5)	52.5	48.5 (56.5)	28	54.5 (63)

( ): Denotes the Normally Open (N.O.) dimensions.

* When using a DIN terminal that faces downward, be careful of interference in the electrical wires and piping.

For Air, Medium Vacuum, Water, Oil and Steam

Replacement Parts

● DIN Connector Part No.

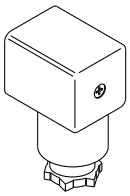

<For Class B Coil>

Electrical option	Rated voltage	Connector part no.
None	24 VDC	C18312G6GCU
	12 VDC	
	100 VAC	
	110 VAC	
	200 VAC	
	220 VAC	
	230 VAC	
	240 VAC	
	24 VAC	
	48 VAC	
With light	24 VDC	GDM2A-L5
	12 VDC	GDM2A-L6
	100 VAC	GDM2A-L1
	110 VAC	GDM2A-L1
	200 VAC	GDM2A-L2
	220 VAC	GDM2A-L2
	230 VAC	GDM2A-L2
	240 VAC	GDM2A-L2
	24 VAC	GDM2A-L5
	48 VAC	GDM2A-L15

<For Class H Coil>

Electrical option	Rated voltage	Connector part no.
None	24 VDC	GDM2A-G-S5
	100 VAC	GDM2A-R
	110 VAC	
	200 VAC	
	220 VAC	
	230 VAC	
	240 VAC	
	24 VAC	
	48 VAC	
With light	24 VDC	GDM2A-G-Z5
	100 VAC	GDM2A-R-L1
	110 VAC	GDM2A-R-L1
	200 VAC	GDM2A-R-L2
	220 VAC	GDM2A-R-L2
	230 VAC	GDM2A-R-L2
	240 VAC	GDM2A-R-L2
	24 VAC	GDM2A-R-L5
	48 VAC	GDM2A-R-L5

∗ Select an appropriate DIN connector suitable for the coil insulation type.

● Gasket Part No. for DIN Connector

VCW20-1-29-1 (For Class B Coil)
VCW20-1-29-1-F (For Class H Coil)

● Lead Wire Assembly for Flat Terminal (Set of 2 pcs.)

VX021S-1-16FB

● Bracket Assembly Part No. (for Metal Body)

VX02 □ N − 12A

1	For VX2 1/4 □□
2	For VX2 2/5 □□
	For VX2 3/6 □□

∗ 2 mounting screws are shipped together with the bracket assembly.
∗ On the bottom side of the standard body, there is no female thread for mounting a bracket.
Please select XNB□.

Glossary of Terms

Pressure Terminology

1. Maximum operating pressure differential

The maximum pressure differential (the difference between the inlet and outlet pressure) which is allowed for operation. When the outlet pressure is 0 MPa, this becomes the maximum operating pressure.

2. Minimum operating pressure differential

The minimum pressure differential (the difference between the inlet pressure and outlet pressure) required to keep the main valve fully open.

3. Maximum system pressure

The maximum pressure that can be applied inside the pipelines (line pressure).

[The pressure differential of the solenoid valve portion must not exceed the maximum operating pressure differential.]

4. Withstand pressure

The pressure in which the valve must be withstood without a drop in performance after holding for one minute under prescribed pressure and returning to the operating pressure range. [value under the prescribed conditions]

Electrical Terminology

1. Apparent power (VA)

Volt-ampere is the product of voltage (V) and current (A).

Power consumption (W): For AC, $W = V \cdot A \cdot \cos\theta$.

For DC, $W = V \cdot A$.

Note) $\cos\theta$ shows power factor. $\cos\theta \approx 0.9$

2. Surge voltage

A high voltage which is momentarily generated by shutting off the power in the shut-off area.

3. Degree of protection

A degree defined in the "JIS C 0920: Waterproof test of electric machinery/appliance and the degree of protection against the intrusion of solid foreign objects."

Verify the degree of protection for each product.

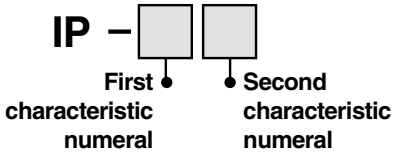

●First Characteristics:
Degrees of protection against solid foreign objects

0	Non-protected
1	Protected against solid foreign objects of 50 mmø and greater
2	Protected against solid foreign objects of 12 mmø and greater
3	Protected against solid foreign objects of 2.5 mmø and greater
4	Protected against solid foreign objects of 1.0 mmø and greater
5	Dust-protected
6	Dust-tight

Electrical Terminology

● Second Characteristics:
Degrees of protection against water

0	Non-protected	—
1	Protected against vertically falling water drops	Dripproof type 1
2	Protected against vertically falling water drops when enclosure tilted up to 15°	Dripproof type 2
3	Protected against rainfall when enclosure tilted up to 60°	Rainproof type
4	Protected against splashing water	Splashproof type
5	Protected against water jets	Water-jet-proof type
6	Protected against powerful water jets	Powerful water-jet-proof type
7	Protected against the effects of temporary immersion in water	Immersible type
8	Protected against the effects of continuous immersion in water	Submersible type

Example) IP65: Dust-tight, Water-jet-proof type

"Water-jet-proof type" means that no water intrudes inside an equipment that could hinder from operating normally by means of applying water for 3 minutes in the prescribed manner. Take appropriate protection measures, since a device is not usable in an environment where a droplet of water is splashed constantly.

Others

1. Material

NBR: Nitrile rubber

FKM: Fluororubber

EPDM: Ethylene propylene rubber

2. Oil-free treatment

The degreasing and washing of wetted parts

3. Symbol

In the symbol ( ), when the valve is closed, flow is blocked from port 1 to port 2. However, if the pressure in port 2 is higher than port 1, the valve will not be able to block the fluid and it will flow from port 2 to port 1.

Flat Terminal

Flat terminal/Electrical connection size of molded coil

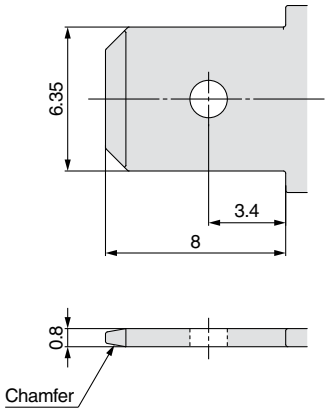

Solenoid Valve Flow-rate Characteristics
(How to indicate flow-rate characteristics)

1. Indication of flow-rate characteristics

The flow-rate characteristics in equipment such as a solenoid valve etc. are indicated in their specifications as shown in Table (1).

Table (1) Indication of Flow-rate Characteristics

Corresponding equipment	Indication by international standard	Other indications	Conformed standard
Pneumatic equipment	***C*, *b***	—	ISO 6358: 1989 JIS B 8390: 2000
	—	***S***	JIS B 8390: 2000 Equipment: JIS B 8373, 8374, 8375, 8379, 8381
		Cv	ANSI/(NFPA)T3.21.3: 1990
Process fluid control equipment	***Av***	—	IEC60534-2-3: 1997 JIS B 2005: 1995 Equipment: JIS B 8471, 8472, 8473
	—	***Cv***	

2. Pneumatic equipment

2.1 Indication according to the international standards

(1) Conformed standard

ISO 6358: 1989 : Pneumatic fluid power—Components using compressible fluids—Determination of flow-rate characteristics

JIS B 8390: 2000 : Pneumatic fluid power—Components using compressible fluids—How to test flow-rate characteristics

(2) Definition of flow-rate characteristics

The flow-rate characteristics are indicated as a result of a comparison between sonic conductance ***C*** and critical pressure ratio ***b***.

Sonic conductance ***C*** : Value which divides the passing mass flow rate of an equipment in a choked flow condition by the product of the upstream absolute pressure and the density in a standard condition.

Critical pressure ratio ***b*** : Pressure ratio (downstream pressure/upstream pressure) which will turn to a choked flow when the value is smaller than this ratio.

Choked flow : The flow in which the upstream pressure is higher than the downstream pressure and where sonic speed in a certain part of an equipment is reached.
Gaseous mass flow rate is in proportion to the upstream pressure and not dependent on the downstream pressure.

Subsonic flow : Flow greater than the critical pressure ratio

Standard condition : Air in a temperature state of 68°F (20°C), absolute pressure 15 psi [0.1 MPa] (= 100 kPa = 1 bar), relative humidity 65%.
It is stipulated by adding the "(ANR)" after the unit depicting air volume.
(standard reference atmosphere)
Conformed standard: ISO 8778: 1990 Pneumatic fluid power—Standard reference atmosphere, JIS B 8393: 2000: Pneumatic fluid power—Standard reference atmosphere

(3) Formula for flow rate

It is described by the practical units as following.

When $\frac{P_2 + 0.1}{P_1 + 0.1} \leq b$, **choked flow**

$$Q = 600 \times C\,(P_1 + 0.1)\sqrt{\frac{293}{273 + t}} \quad \cdots\cdots (1)$$

When $\frac{P_2 + 0.1}{P_1 + 0.1} > b$, **subsonic flow**

$$Q = 600 \times C\,(P_1 + 0.1)\sqrt{1 - \left[\frac{\frac{P_2 + 0.1}{P_1 + 0.1} - b}{1 - b}\right]^2}\sqrt{\frac{293}{273 + t}} \quad \cdots\cdots (2)$$

Q : Air flow rate [dm^3/min (ANR)], dm^3 (Cubic decimeter) of SI unit are also allowed to be described by L (liter).
1 dm^3 = 1 L

C : Sonic conductance [dm³/(s·bar)]
b : Critical pressure ratio [—]
P_1 : Upstream pressure [MPa]
P_2 : Downstream pressure [MPa]
t : Temperature [°C]
Note) Formula of subsonic flow is the elliptic analogous curve.
Flow-rate characteristics are shown in Graph (1) For details, please make use of SMC's "Energy Saving Program."

Example)
Obtain the air flow rate for P_1 = 0.4 [MPa], P_2 = 0.3 [MPa], ***t*** = 20 [°C] when a solenoid valve is performed in ***C*** = 2 [dm³/(s·bar)] and ***b*** = 0.3.

According to formula 1, the maximum flow rate = 600 x 2 x (0.4 + 0.1) x $\sqrt{\dfrac{293}{273 + 20}}$ = 600 [dm³/min (ANR)]

Pressure ratio = $\dfrac{0.3 + 0.1}{0.4 + 0.1}$ = 0.8

Based on Graph (1), the flow rate will be 0.7 when the pressure ratio is 0.8 and ***b*** = 0.3.
Hence, flow rate = Maximum flow rate x flow rate ratio = 600 x 0.7 = 420 [dm³/min (ANR)]

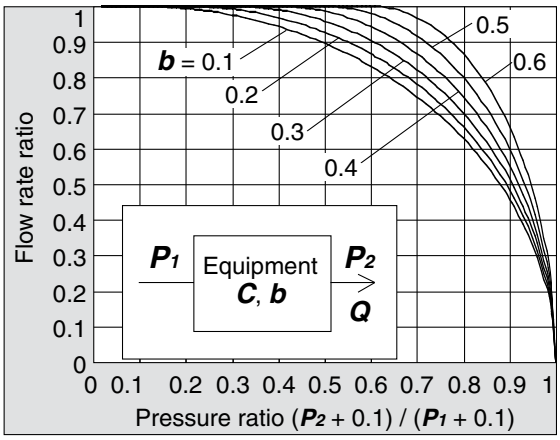

Graph (1) Flow-rate characteristics

(4) Test method
Attach a test equipment with the test circuit shown in Fig. (1) while maintaining the upstream pressure to a certain level which does not go below 0.3 MPa. Next, measure the maximum flow to be saturated in the first place, then measure this flow rate at 80%, 60%, 40%, 20% and the upstream and downstream pressure. And then, obtain the sonic conductance ***C*** from this maximum flow rate. Besides that, substitute each data of others for the subsonic flow formula to find ***b***, then obtain the critical pressure ratio ***b*** from that average.

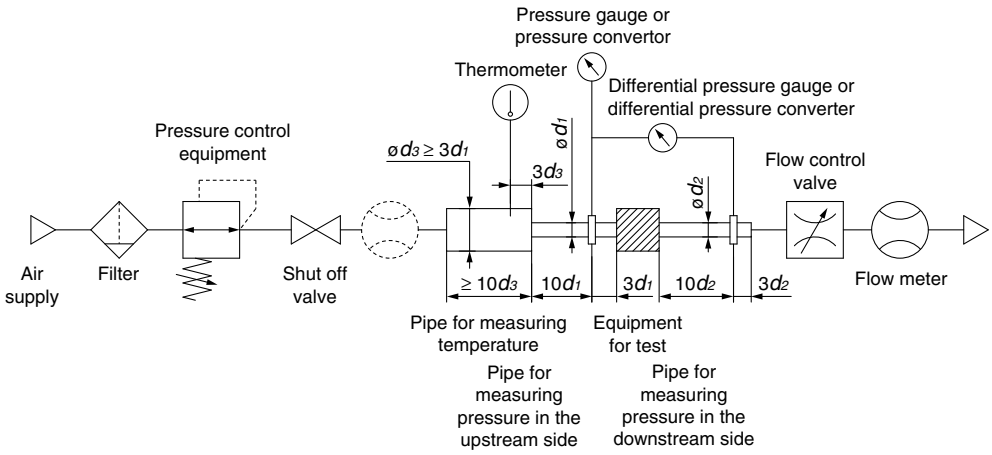

Fig. (1) Test circuit based on ISO 6358, JIS B 8390

2.2 Effective area *S*

(1) Conformed standard

JIS B 8390: 2000: Pneumatic fluid power—Components using compressible fluids—Determination of flow rate characteristics

Equipment standards: JIS B 8373: 2 port solenoid valve for pneumatics
JIS B 8374: 3 port solenoid valve for pneumatics
JIS B 8375: 4 port, 5 port solenoid valve for pneumatics
JIS B 8379: Silencer for pneumatics
JIS B 8381: Fittings of flexible joint for pneumatics

(2) Definition of flow-rate characteristics

Effective area ***S***: The cross-sectional area having an ideal throttle without friction deduced from the calculation of the pressure changes inside an air tank or without reduced flow when discharging the compressed air in a choked flow, from an equipment attached to the air tank. This is the same concept representing the "easy to run through" as sonic conductance ***C***.

(3) Formula for flow rate

When $\frac{P_2 + 0.1}{P_1 + 0.1} \leq 0.5$, **choked flow**

$$Q = 120 \times S\,(P_1 + 0.1)\sqrt{\frac{293}{273 + t}} \quad \cdots\cdots (3)$$

When $\frac{P_2 + 0.1}{P_1 + 0.1} > 0.5$, **subsonic flow**

$$Q = 240 \times S\,\sqrt{(P_2 + 0.1)\,(P_1 - P_2)}\sqrt{\frac{293}{273 + t}} \quad \cdots\cdots (4)$$

Conversion with sonic conductance ***C***:

$$S = 5.0 \times C \quad \cdots\cdots (5)$$

Q : Air flow rate[dm^3/min(ANR)], dm^3 (cubic decimeter) of SI unit are also allowed to be described by L (liter) 1 dm^3 = 1 L
S : Effective area [mm^2]
P_1 : Upstream pressure [MPa]
P_2 : Downstream pressure [MPa]
t : Temperature [°C]

Note) Formula for subsonic flow (4) is only applicable when the critical pressure ratio ***b*** is the unknown equipment. In the formula (2) by the sonic conductance ***C***, it is the same formula as when ***b*** = 0.5.

(4) Test method

Attach a test equipment with the test circuit shown in Fig. (2) in order to discharge air into the atmosphere until the pressure inside the air tank goes down to 0.25 MPa (0.2 MPa) from an air tank filled with the compressed air at a certain pressure level (0.5 MPa) which does not go below 0.6 MPa. At this time, measure the discharging time and the residual pressure inside the air tank which had been left until it turned to be the normal values to determine the effective area ***S***, using the following formula. The volume of an air tank should be selected within the specified range by corresponding to the effective area of an equipment for test. In the case of JIS B 8373, 8374, 8375, 8379, 8381, the pressure values are in parentheses and the coefficient of the formula is 12.9.

$$S = 12.1\,\frac{V}{t}\,\log_{10}\left(\frac{P_s + 0.1}{P + 0.1}\right)\sqrt{\frac{293}{T}} \quad \cdots\cdots (6)$$

S : Effective area [mm^2]
V : Air tank capacity [dm^3]
t : Discharging time [s]
P_s : Pressure inside air tank before discharging [MPa]
P : Residual pressure inside air tank after discharging [MPa]
T : Temperature inside air tank before discharging [K]

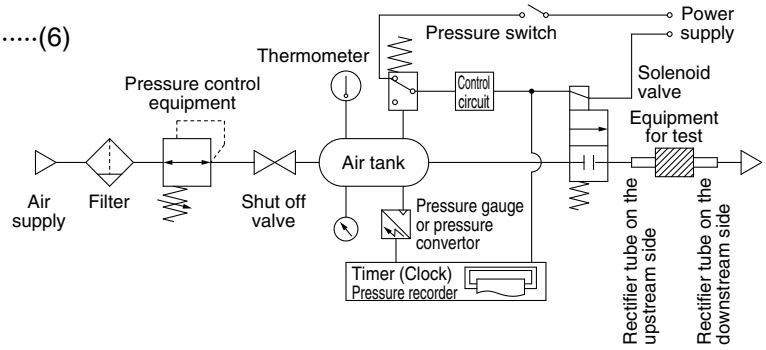

Fig. (2) Test circuit based on JIS B 8390

2.3 Flow coefficient *Cv* factor

The United States Standard ANSI/(NFPA)T3.21.3: 1990: Pneumatic fluid power—Flow rating test procedure and reporting method for fixed orifice components

Defines the ***Cv*** factor of flow coefficient by the following formula which is based on the test conducted by the test circuit analogous to ISO 6358.

$$Cv = \frac{Q}{114.5\sqrt{\frac{\Delta P\,(P_2 + P_a)}{T_1}}} \quad \cdots\cdots (7)$$

ΔP : Pressure drop between the static pressure tapping ports [bar]
P_1 : Pressure of the upstream tapping port [bar gauge]
P_2 : Pressure of the downstream tapping port [bar gauge]: $P_2 = P_1 - \Delta P$
Q : Flow rate [dm³/s standard condition]
P_a : Atmospheric pressure [bar absolute]
T_1 : Upstream absolute temperature [K]

Test conditions are < $P_1 + P_a = 6.5 \pm 0.2$ bar absolute, $T_1 = 297 \pm 5$ K, 0.07 bar $\leq \Delta P \leq$ 0.14 bar.

This is the same concept as effective area ***A*** which ISO 6358 stipulates as being applicable only when the pressure drop is smaller than the upstream pressure and the compression of air does not become a problem.

3. Process fluid control equipment

(1) Conformed standard

IEC60534-2-3: 1997: Industrial process control valves. Part 2: Flow capacity, Section Three-Test procedures
JIS B 2005: 1995: Test method for the flow coefficient of a valve
Equipment standards: JIS B 8471: Solenoid valve for water
JIS B 8472: Solenoid valve for steam
JIS B 8473: Solenoid valve for fuel oil

(2) Definition of flow-rate characteristics

Av factor: Value of the clean water flow rate represented by m³/s which runs through a valve (equipment for test) when the pressure difference is 1 Pa. It is calculated using the following formula.

$$Av = Q\sqrt{\frac{\rho}{\Delta P}} \quad \cdots\cdots (8)$$

Av : Flow coefficient [m²]
Q : Flow rate [m³/s]
ΔP : Pressure difference [Pa]
ρ : Fluid density [kg/m³]

(3) Formula of flow rate

It is described by the practical units. Also, the flow-rate characteristics are shown in Graph (2).

In the case of liquid:

$$Q = 1.9 \times 10^6 Av\sqrt{\frac{\Delta P}{G}} \quad \cdots\cdots (9)$$

Q : Flow rate [L/min]
Av : Flow coefficient [m²]
ΔP : Pressure difference [MPa]
G : Relative density [water = 1]

In the case of saturated aqueous vapor:

$$Q = 8.3 \times 10^6 Av\sqrt{\Delta P(P_2 + 0.1)} \quad \cdots\cdots (10)$$

Q : Flow rate [kg/h]
Av : Flow coefficient [m²]
ΔP : Pressure difference [MPa]
P_1 : Upstream pressure [MPa]: $\Delta P = P_1 - P_2$
P_2 : Downstream pressure [MPa]

Conversion of flow coefficient:

$Av = 28 \times 10^{-6}\ Kv = 24 \times 10^{-6}\ Cv$ .....(11)

Here,

Kv factor : Value of the clean water flow rate represented by m^3/h which runs through a valve at 5 to 40°C, when the pressure difference is 1 bar.

Cv factor (Reference values): Figures representing the flow rate of clean water by US gal/min which runs through a valve at 60°F, when the pressure difference is 1 lbf/in^2 (psi).

Value is different from ***Kv*** and ***Cv*** factors for pneumatic purpose due to different test method.

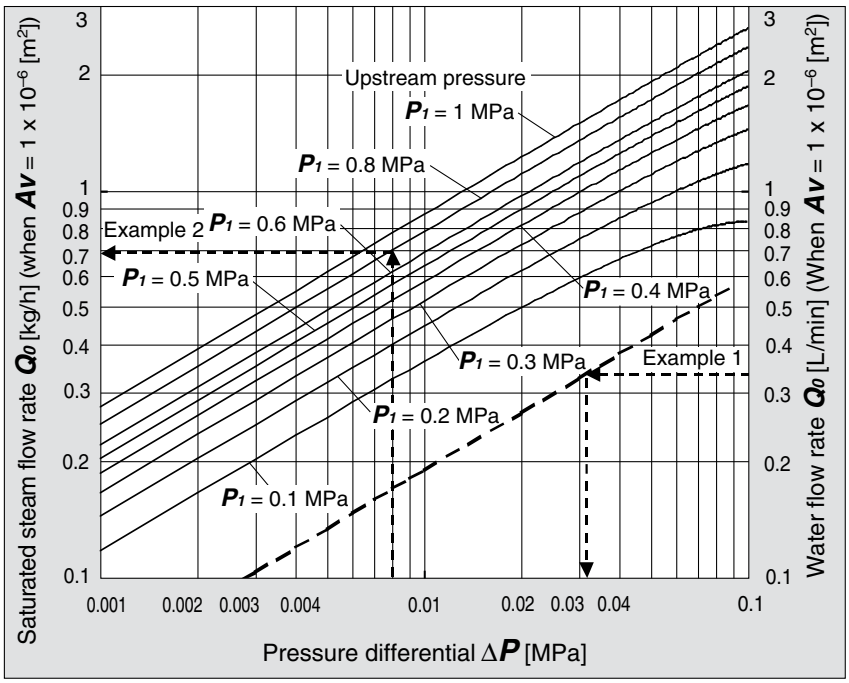

Graph (2) Flow-rate characteristics

Example 1)

Obtain the pressure difference when water 15 [L/min] runs through a solenoid valve with an $Av = 45 \times 10^{-6}$ [m^2]. Since $Q_0 = 15/45 = 0.33$ [L/min], according to Graph (2), if reading ΔP when Q_0 is 0.33, it will be 0.031 [MPa].

Example 2)

Obtain the saturated steam flow rate when $P_1 = 0.8$ [MPa], $\Delta P = 0.008$ [MPa] with a solenoid valve with an $Av = 1.5 \times 10^{-6}$ [m^2].

According to Graph (2), if reading Q_0 when P_1 is 0.8 and ΔP is 0.008, it is 0.7 [kg/h]. Hence, the flow rate $Q = 0.7 \times 1.5 = 1.05$ [kg/h].

(4) Test method

Attach a test equipment with the test circuit shown in Fig. (3). Next, pour water at 5 to 40°C, then measure the flow rate with a pressure difference of 0.075 MPa. However, the pressure difference needs to be set with a large enough difference so that the Reynolds number does not go below a range of 4×10^4 .

By substituting the measurement results for formula (8) to figure out ***Av***.

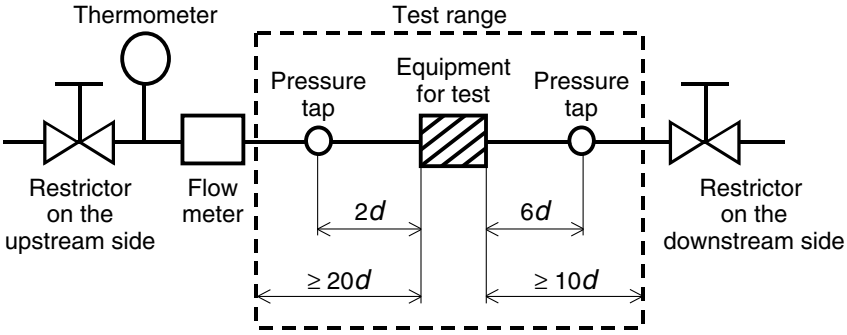

Fig. (3) Test circuit based on IEC60534-2-3, JIS B 2005

Flow-rate Characteristics 1

Note) Use this graph as a guide. In the case of obtaining an accurate flow rate, refer to pages 38 through to 42.

For Air

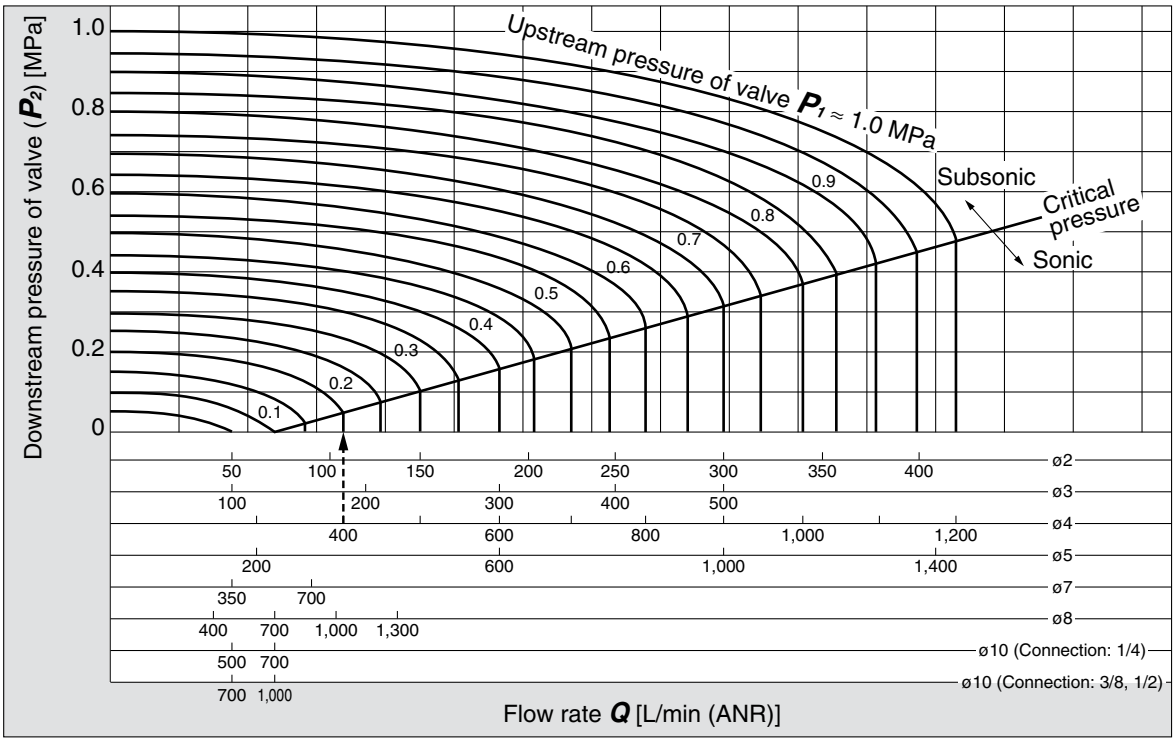

How to read the graph

The sonic range pressure to generate a flow rate of 14.1 scfm [400 L/min] (ANR) is $P_1 \approx 29$ psi (0.2 MPa) for a ø4 orifice and $P_1 \approx 84$ psi (0.58 MP)a for a ø3 orifice.

For Water

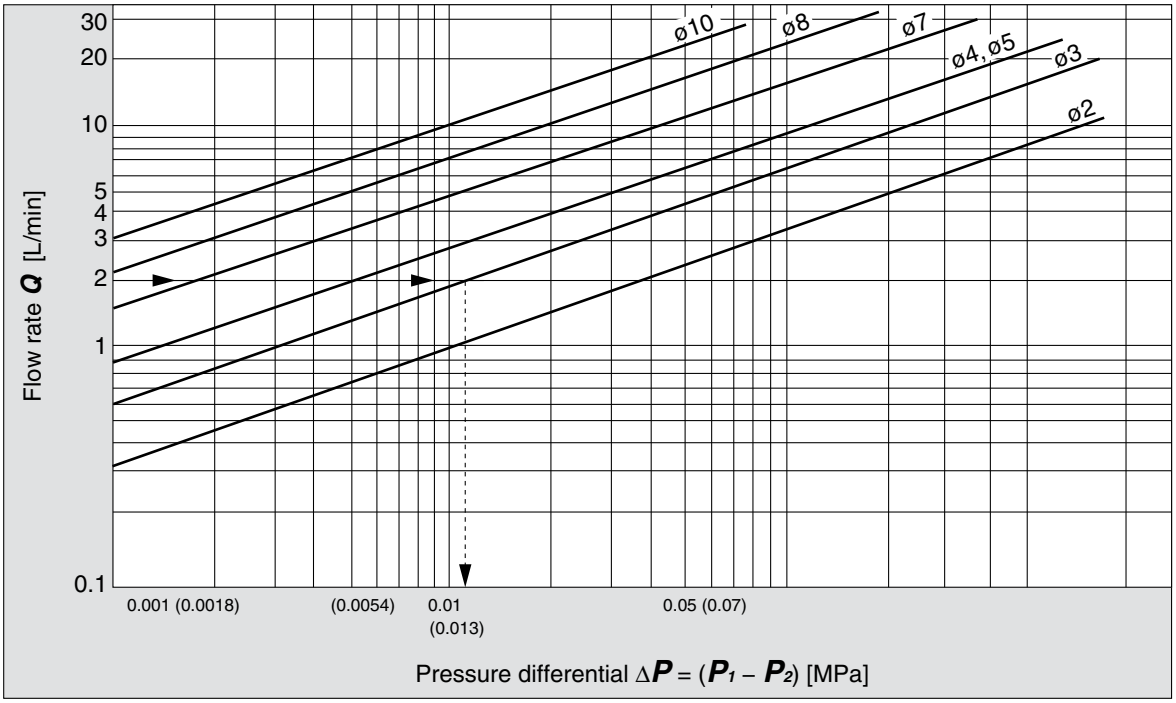

How to read the graph

When a water flow of 0.07 scfm (2 L/min) is generated, $\Delta P \approx 1.9$ psi (0.013 MPa) for a valve with ø3 orifice.

Flow-rate Characteristics 2

Note) Use this graph as a guide. In the case of obtaining an accurate flow rate, refer to pages 38 through to 42.

For Saturated Steam

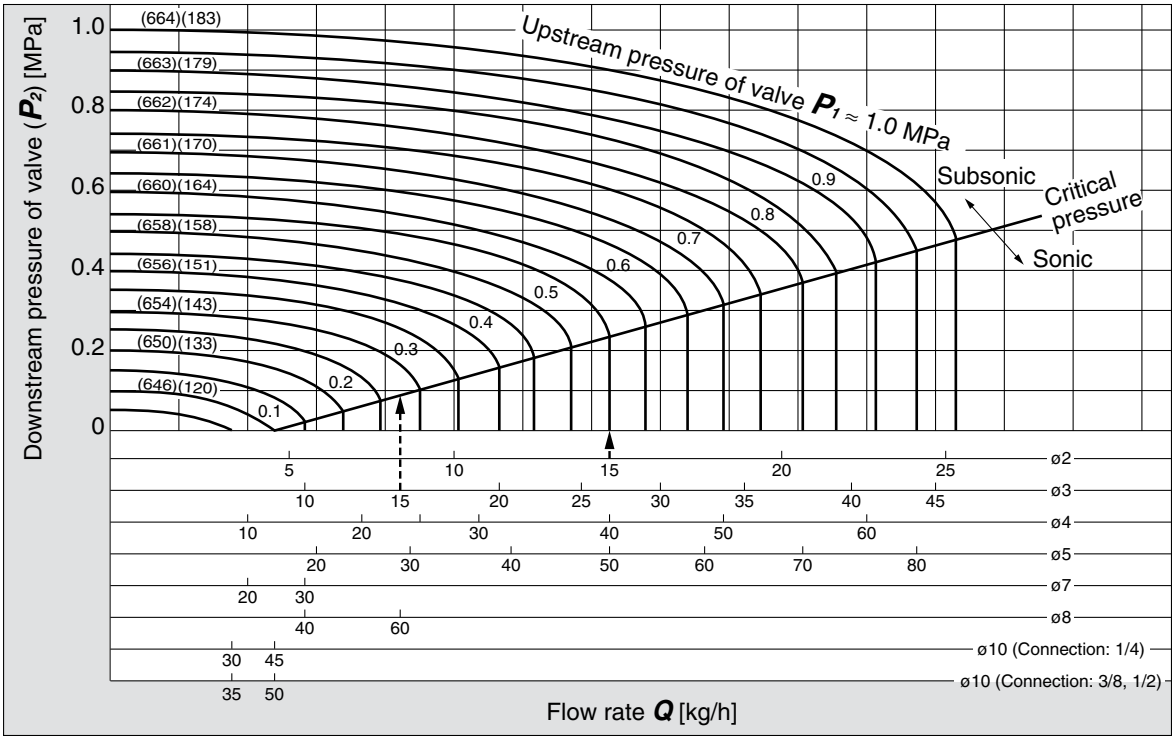

How to read the graph

The sonic range pressure to generate a flow rate of 15 kg/h is $P_1 \approx 0.55$ MPa for a ø2 orifice and $P_1 \approx 0.28$ MPa for a ø3 orifice.
The amount of potential heat varies somewhat based on the pressure P_1. At 15 kg/h, there will be approximately 9700 kcal/h of heat.

Series VX21/22/23
Specific Product Precautions 1

Be sure to read this before handling.
Refer to the back cover for Safety Instructions. For 2 Port Solenoid Valves for Fluid Control Precautions, refer to "Handling Precautions for SMC Products" and the Operation Manual on SMC website, http://www.smcworld.com

Design

⚠ Warning

1. Cannot be used as an emergency shutoff valve etc.
The valves presented in this catalog are not designed for safety applications such as an emergency shutoff valve. If the valves are used in this type of system, other reliable safety assurance measures should also be adopted.

2. Extended periods of continuous energization
The solenoid coil will generate heat when continuously energized. Avoid using in a tightly shut container. Install it in a well ventilated area. Furthermore, do not touch it while it is being energized or right after it is energized.

3. Liquid rings
In cases with a flowing liquid, provide a bypass valve in the system to prevent the liquid from entering the liquid seal circuit.

4. Actuator drive
When an actuator, such as a cylinder, is to be driven using a valve, take appropriate measures to prevent potential danger caused by actuator operation.

5. Pressure (including vacuum) holding
It is not usable for an application such as holding the pressure (including vacuum) inside of a pressure vessel because air leakage is entailed in a valve.

6. When the conduit type is used as equivalent to an IP65 enclosure, install a wiring conduit etc.

7. When an impact, such as water hammer etc., caused by the rapid pressure fluctuation is applied, the solenoid valve may be damaged. Give an attention to it.

Selection

⚠ Warning

1. Fluid

1) Type of fluid
Before using a fluid, check whether it is compatible with the materials of each model by referring to the fluids listed in this catalog. Use a fluid with a kinematic viscosity of 50 mm^2/s or less. If there is something you do not know, please contact SMC.

2) Flammable oil, Gas
Check the specifications for leakage in the interior and/or exterior area.

3) Corrosive gas
Cannot be used since it will lead to cracks by stress corrosion or result in other incidents.

4) When a brass body is used, then depending on water quality, corrosion and internal leakage may occur. If such abnormalities occur, exchange the product for a stainless steel body.

5) Use an oil-free specification when any oily particle must not enter the passage.

6) Applicable fluid on the list may not be used depending on the operating condition. Give adequate confirmation, and then determine a model, just because the compatibility list shows the general case.

Selection

⚠ Warning

2. Fluid quality

<Air>

1) Use clean air.
Do not use compressed air that contains chemicals, synthetic oils including organic solvents, salt or corrosive gases, etc., as it can cause damage or malfunction.

2) Install an air filter.
Install air filters close to the valves on the upstream side. A filtration degree of 5 μm or less should be selected.

3) Install an aftercooler or air dryer, etc.
Compressed air that contains excessive drainage may cause malfunction of valves and other pneumatic equipment. To prevent this, install an aftercooler or air dryer, etc.

4) If excessive carbon powder is generated, eliminate it by installing mist separators at the upstream side of valves.
If excessive carbon powder is generated by the compressor, it may adhere to the inside of the valves and cause a malfunction.

Refer to Best Pneumatics No.5 for further details on compressed air quality.

<Vacuum>

Please be aware that there is a range of pressure that can be used.

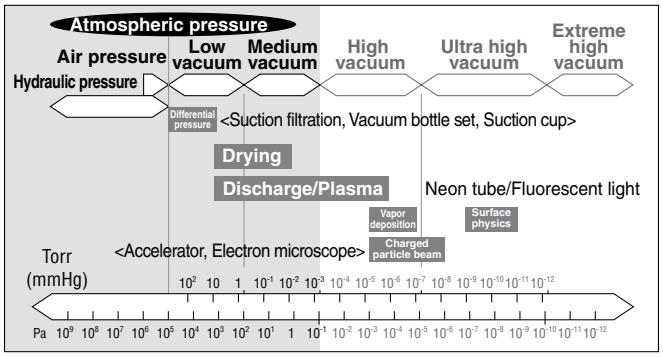

Vacuum piping direction: if the system uses a vacuum pump, we ask that you install the vacuum pump on the secondary side.

Also, install a filter on the primary side, and be careful that no foreign object is picked up.

Please replace the valve after operating the device approximately 300,000 times.

Series VX21/22/23
Specific Product Precautions 2

Be sure to read this before handling.
Refer to the back cover for Safety Instructions. For 2 Port Solenoid Valves for Fluid Control Precautions, refer to "Handling Precautions for SMC Products" and the Operation Manual on SMC website, http://www.smcworld.com

Selection

⚠ Warning

<Water>

The use of a fluid that contains foreign objects can cause problems such as malfunction and seal failure by promoting wear of the valve seat and armature and by sticking to the sliding parts of the armature etc. Install a suitable filter (strainer) immediately upstream from the valve. As a general rule, use 100 mesh.

The supply water includes materials that create a hard sediment or sludge such as calcium and magnesium. Since this scale and sludge can cause the valve to malfunction, install water softening equipment, and a filter (strainer) directly upstream from the valve to remove these substances.

Tap water pressure:

The water pressure for tap water is normally 0.4 MPa or less. However, in places like a high-rise building, the pressure may be 1.0 MPa. When selecting tap water, be careful of the maximum operating pressure differential.

When using water or heated water, poor operation or leaks may be caused by dezincification, erosion, corrosion, etc. The brass (C37) body of this product uses dezincification resistant material as a standard. We also offer a stainless steel body type with improved corrosion resistance. Please use the one that fits your needs.

<Oil>

Generally, FKM is used as seal material, as it is resistant to oil. The resistance of the seal material may deteriorate depending on the type of oil, manufacturer or additives. Check the resistance before using. The kinematic viscosity must not exceed 50 mm^2/s.

<Steam>

The use of a steam that contains foreign objects can cause problems such as malfunction and seal failure by promoting wear of the valve seat and armature, and by sticking to the sliding parts of the armature etc. Install a suitable filter (strainer) immediately upstream from the valve.

As a standard, the mesh count for the strainer is 100 mesh. However, the size and shape of foreign objects that occur depends on the operating environment. Check the fluid status and choose an appropriate mesh count.

The supply water to a boiler includes materials that create a hard sediment or sludge such as calcium and magnesium.

Sediment and sludge from steam can cause the valve to not operate properly. Install a water softening device, which removes these materials. Do not use operation steam which contains chemicals, synthetic oils containing organic solvents, salts or corrosive gases, etc., as these can cause damage or deterioration.

3. Ambient environment

Use within the operable ambient temperature range. Check the compatibility between the product's composition materials and the ambient atmosphere. Be certain that the fluid used does not touch the external surface of the product.

4. Countermeasures against static electricity

Take measures to prevent static electricity since some fluids can cause static electricity.

Selection

⚠ Warning

5. Low temperature operation

1) The valve can be used in an ambient temperature of between –4 to 14°F (–20 to –10°C). However, take measures to prevent freezing or solidification of impurities, etc.
2) When using valves for water application in cold climates, take appropriate countermeasures to prevent the water from freezing in tubing after cutting the water supply from the pump, by draining the water etc. When warming by a heater etc., be careful not to expose the coil portion to a heater. Installation of a dryer, heat retaining of the body is recommended to prevent a freezing condition in which the dew point temperature is high and the ambient temperature is low, and the high flow runs.

⚠ Caution

1. Leakage voltage

Particularly when using a resistor in parallel with a switching element and using a C-R element (surge voltage suppressor) to protect the switching element, take note that leakage current will flow through the resistor, C-R element, etc., creating a possible danger that the valve may not turn off.

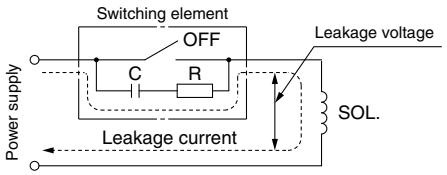

AC coil: 5% or less of rated voltage
DC coil: 2% or less of rated voltage

2. Selecting model

Material depends on fluid. Select optimal models for the fluid.

3. When the fluid is oil.

The kinematic viscosity must not exceed 50 mm^2/s.

Mounting

⚠ Warning

1. If air leakage increases or equipment does not operate properly, stop operation.

After mounting is completed, confirm that it has been done correctly by performing a suitable function test.

2. Do not apply external force to the coil section.

When tightening is performed, apply a wrench or other tool to the outside of the piping connection parts.

3. Mount a valve with its coil position upward, not downward.

When mounting a valve with its coil positioned downward, foreign objects in the fluid will adhere to the iron core leading to a malfunction. Especially for strict leakage control, such as with vacuum applications and non-leak specifications, the coil must be positioned upward.

4. Do not warm the coil assembly with a heat insulator etc.

Use tape, heaters, etc., for freeze prevention on the piping and body only. They can cause the coil to burn out.

Series VX21/22/23
Specific Product Precautions 3

Be sure to read this before handling.
Refer to the back cover for Safety Instructions. For 2 Port Solenoid Valves for Fluid Control Precautions, refer to "Handling Precautions for SMC Products" and the Operation Manual on SMC website, http://www.smcworld.com

Mounting

⚠Warning

5. Secure with brackets, except in the case of steel piping and copper fittings.
6. Avoid sources of vibration, or adjust the arm from the body to the minimum length so that resonance will not occur.
7. Painting and coating
Warnings or specifications printed or labeled on the product should not be erased, removed or covered up.

Disassembly/Assembly Procedures

⚠Caution

1. Before starting the disassembly work, be sure to shut off the power supply and pressure supply, and then release the residual pressure.

Disassembly

<N.C.>
1) Loosen the mounting screws.
The coil assembly, seal, return spring, armature assembly and body can be removed.

<N.O.>
1) Loosen the mounting screws.
The coil assembly, push rod assembly, O-rings, adapter and body can be removed.

Assembly

<Common to N.C. and N.O.>
1) Mount the components on the body in the reverse order of disassembly.
2) When changing the electrical entry direction, turn the coil assembly in a desired direction to mount it.
3) Push the coil assembly against the body and tighten the screws two or more rounds diagonally (Fig. 2) in the status that there are no gaps between the coil assembly and body (Fig. 1).
Tighten the screws in the order of "1→2→3→4→1→2→3→4".

Proper Tightening Torque

VX21	0.37 lbf·ft (0.5 N·m)
VX22	0.52lbf·ft (0.7N·m)
VX23	

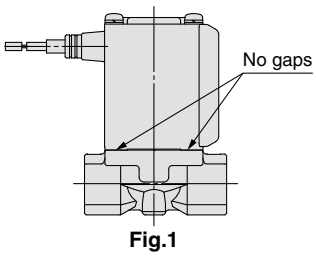

Fig.1

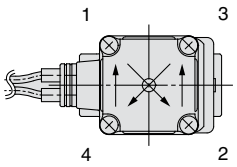

Fig.2

∗ After tightening the screws, make sure that there are no gaps between the coil and body (Fig. 1).
∗ After the disassembly and assembly have been completed, make sure that no leak occurs from the seal. Additionally, when restarting the valve, make sure that the valve operates correctly after checking the safety.

Disassembly/Assembly Procedures

⚠Caution

<N.C.> **<N.O.>**

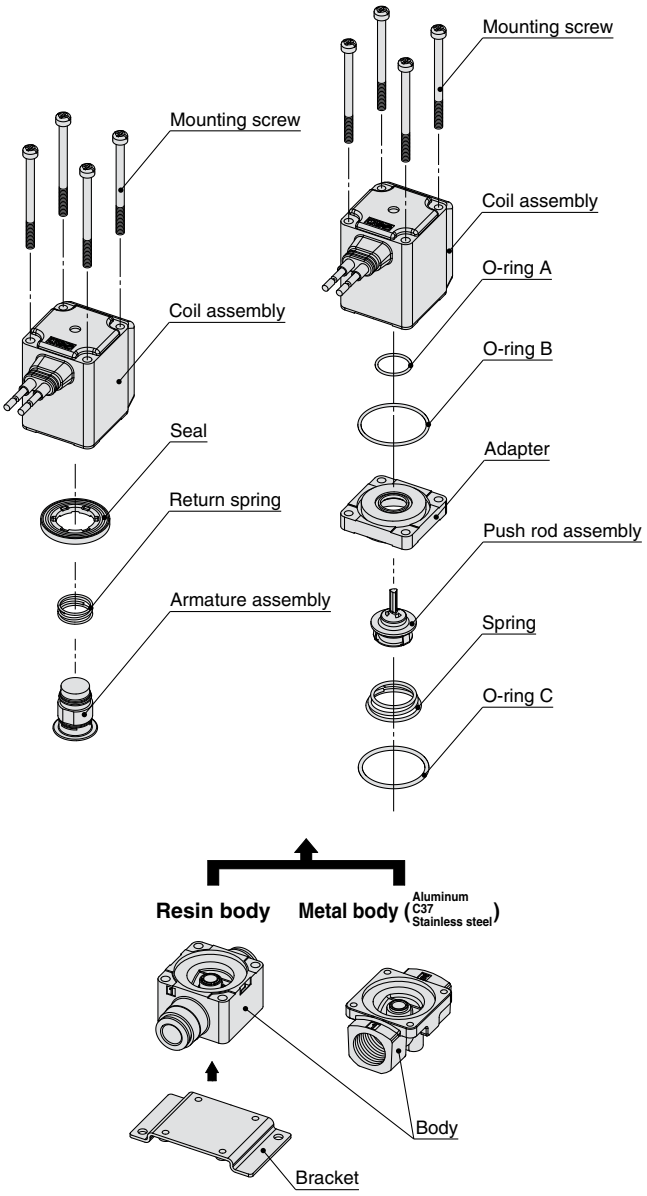

Specific Product Precautions 4

Be sure to read this before handling.
Refer to the back cover for Safety Instructions. For 2 Port Solenoid Valves for Fluid Control Precautions, refer to "Handling Precautions for SMC Products" and the Operation Manual on SMC website, http://www.smcworld.com

Disassembly/Assembly Procedures

⚠Caution

Manifold Exploded View

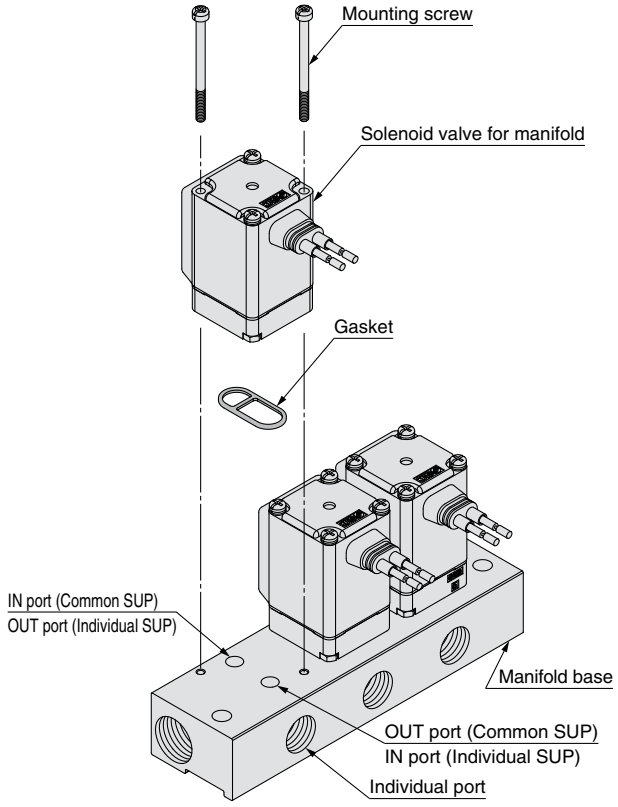

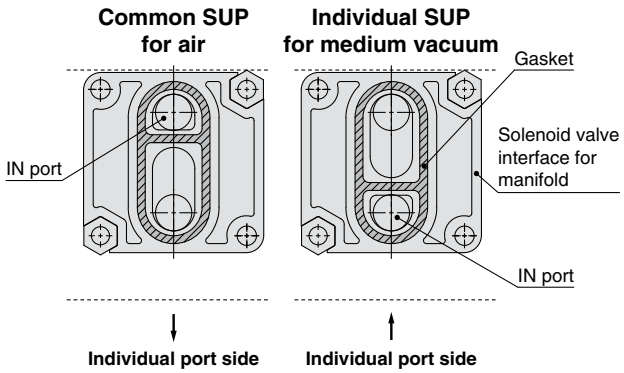

∗ Mounting orientation exists when mounting valves onto manifold base. Mount it as shown above.
∗ Take great care when special electrical entry direction (XC) is used.

Piping

⚠Warning

1. During use, deterioration of the tube or damage to the fittings could cause tubes to come loose from their fittings and thrash about.

To prevent uncontrolled tube movement, install protective covers or fasten tubes securely in place.

2. For piping the tube, fix the product securely using the mounting holes so that the product is not in the air.

⚠Caution

1. Preparation before piping

Before piping is connected, it should be thoroughly blown out with air (flushing) or washed to remove chips, cutting oil and other debris from inside the pipe. Avoid pulling, compressing, or bending the valve body when piping.

2. Avoid connecting ground lines to piping, as this may cause electric corrosion of the system.

3. Always tighten threads with the proper tightening torque.

When using steel piping, tighten with the proper tightening torque shown below.
Lower tightening torque will lead into fluid leakage.

Tightening Torque for Piping

Thread size	Proper tightening torque lbf·ft (N·m)
Rc1/8	5.2 to 6.6 (7 to 9)
Rc1/4	8.9 to 10.3 (12 to 14)
Rc3/8	16.2 to 17.7 (22 to 24)
Rc1/2	20.7 to 22.1 (28 to 30)

4. Connection of piping to products

When connecting piping to a product, avoid mistakes regarding the supply port etc.

5. Wrapping of sealant tape

When connecting pipes, fittings, etc., be sure that chips from the pipe threads and sealing material do not enter the valve.
Furthermore, when sealant tape is used, leave 1.5 to 2 thread ridges exposed at the end of the threads.

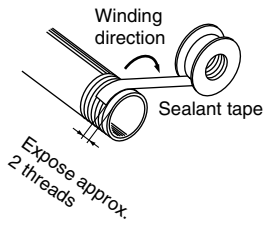

6. In applications such as vacuum and non-leak specifications, use caution specifically against the contamination of foreign objects or airtightness of the fittings.

Specific Product Precautions 5

Be sure to read this before handling.
Refer to the back cover for Safety Instructions. For 2 Port Solenoid Valves for Fluid Control Precautions, refer to "Handling Precautions for SMC Products" and the Operation Manual on SMC website, http://www.smcworld.com

Recommended Piping Conditions

1. When connecting tubes using One-touch fittings, provide some spare tube length shown in Fig. 1, recommended piping configuration.
Also, do not apply external force to the fittings when binding tubes with bands etc. (see Fig. 2.)

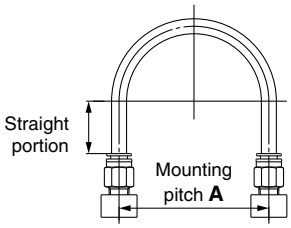

Fig. 1 Recommended piping configuration

Unit: mm

Tube size	Mounting pitch **A**			Straight portion length
	Nylon tubing	Soft nylon tubing	Polyurethane tubing	
ø1/8"	44 or more	29 or more	25 or more	16 or more
ø6	84 or more	39 or more	39 or more	30 or more
ø1/4"	89 or more	56 or more	57 or more	32 or more
ø8	112 or more	58 or more	52 or more	40 or more
ø10	140 or more	70 or more	69 or more	50 or more
ø12	168 or more	82 or more	88 or more	60 or more

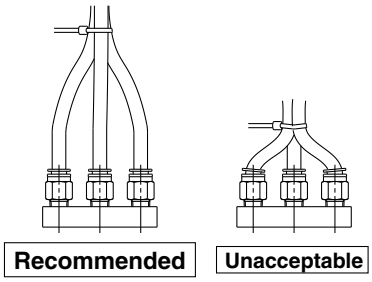

Fig. 2 Binding tubes with bands

Wiring

⚠Warning

1. Do not apply AC voltage to Class "H" coil AC type unless it is built in full-wave rectifier, or the coil will be damaged.

⚠Caution

1. As a rule, use electrical wire with a cross sectional area of 0.5 to 1.25 mm^2 for wiring.
Furthermore, do not allow excessive force to be applied to the lines.

2. Use electrical circuits which do not generate chattering in their contacts.

3. Use voltage which is within ±10% of the rated voltage. In cases with a DC power supply where importance is placed on responsiveness, stay within ±5% of the rated value. The voltage drop is the value in the lead wire section connecting the coil.

4. When a surge from the solenoid affects the electrical circuitry, install a surge voltage suppressor etc., in parallel with the solenoid. Or, adopt an option that comes with the surge voltage protection circuit. (However, a surge voltage occurs even if the surge voltage protection circuit is used. For details, please consult with SMC.)

Specific Product Precautions 6

Be sure to read this before handling.
Refer to the back cover for Safety Instructions. For 2 Port Solenoid Valves for Fluid Control Precautions, refer to "Handling Precautions for SMC Products" and the Operation Manual on SMC website, http://www.smcworld.com

Operating Environment

⚠Warning

1. **Do not use in an atmosphere having corrosive gases, chemicals, sea water, water, water steam, or where there is direct contact with any of these.**
2. **Do not use in explosive atmospheres.**
3. **Do not use in locations subject to vibration or impact.**
4. **Do not use in locations where radiated heat will be received from nearby heat sources.**
5. **Employ suitable protective measures in locations where there is contact with water droplets, oil or welding spatter, etc.**

Maintenance

⚠Warning

1. **Removing the product**
   The valve will reach a high temperature when used with high temperature fluids. Confirm that the valve temperature has dropped sufficiently before performing work. If touched inadvertently, there is a danger of being burned.
   1) Shut off the fluid supply and release the fluid pressure in the system.
   2) Shut off the power supply.
   3) Dismount the product.
2. **Low frequency operation**
   Switch valves at least once every 30 days to prevent malfunction. Also, in order to use it under the optimum state, conduct a regular inspection once a half year.

⚠Caution

1. **Filters and strainers**
   1) Be careful regarding clogging of filters and strainers.
   2) Replace filter elements after one year of use, or earlier if the pressure drop reaches 15 psi (0.1 MPa).
   3) Clean strainers when the pressure drop reaches 15 psi (0.1 MPa).
2. **Lubrication**
   When using after lubricating, never forget to lubricate continuously.
3. **Storage**
   In case of long term storage after use, thoroughly remove all moisture to prevent rust and deterioration of rubber materials etc.
4. **Exhaust the drainage from an air filter periodically.**

Operating Precautions

⚠Warning

1. **If there is a possibility of reverse pressure being applied to the valve, take countermeasures such as mounting a check valve on the downstream side of the valve.**
2. **When problems are caused by a water hammer, install water hammer relief equipment (accumulator etc.), or use an SMC water hammer relief valve (Series VXR). For details, please consult with SMC.**

Electrical Connections

⚠Caution

■ Grommet

Class B coil: AWG20 Insulator O.D. 2.5 mm

Class H coil: AWG18 Insulator O.D. 2.1 mm

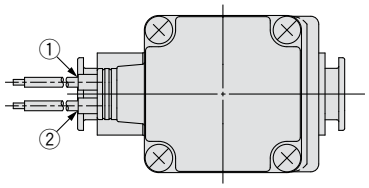

Rated voltage	Lead wire color	
	①	②
DC	Black	Red
100 VAC	Blue	Blue
200 VAC	Red	Red
Other AC	Gray	Gray

∗ There is no polarity.

■ DIN terminal

Since internal connections are shown below for the DIN terminal, make connections to the power supply accordingly.

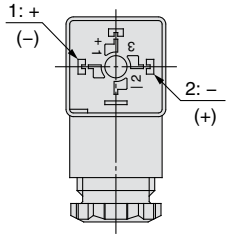

Terminal no.	1	2
DIN terminal	+ (–)	– (+)

∗ There is no polarity.
• Use compatible heavy duty cords with cable O.D. ø6 to ø12 mm.
• Use the tightening torques below for each section.

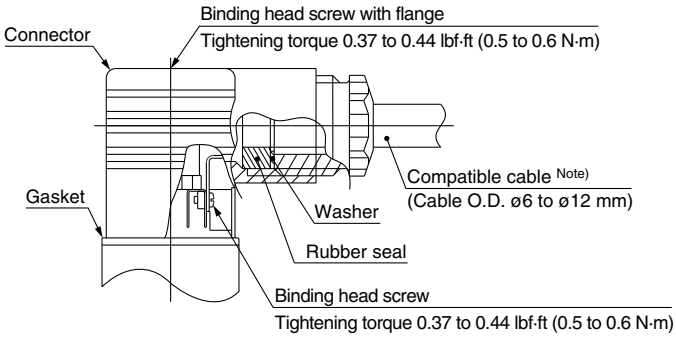

Note) For an outside cable O.D. ø9 to ø12 mm, remove the internal parts of the rubber seal before using.

Specific Product Precautions 7

Be sure to read this before handling.
Refer to the back cover for Safety Instructions. For 2 Port Solenoid Valves for Fluid Control Precautions, refer to "Handling Precautions for SMC Products" and the Operation Manual on SMC website, http://www.smcworld.com

Electrical Connections

⚠ Caution

■ Conduit terminal

In the case of the conduit terminal, make connections according to the marks shown below.

- Use the tightening torques below for each section.
- Properly seal the terminal connection (G1/2) with the special wiring conduit etc.

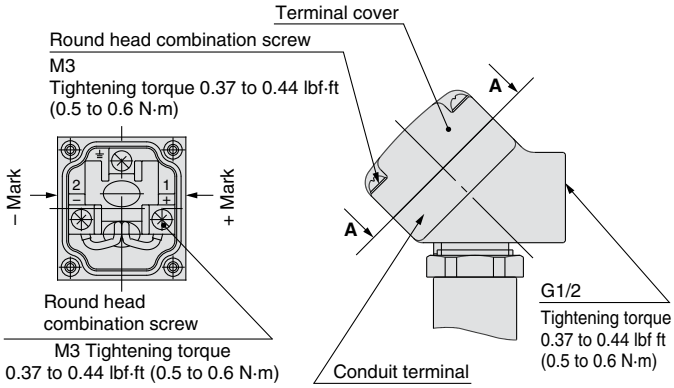

View A-A
(Internal connection diagram)

■ Conduit

When used as an IP65 equivalent, use seal to install the wiring conduit. Also, use the tightening torque below for the conduit.

Class B coil: AWG20 Insulator O.D. 2.5 mm
Class H coil: AWG18 Insulator O.D. 2.1 mm

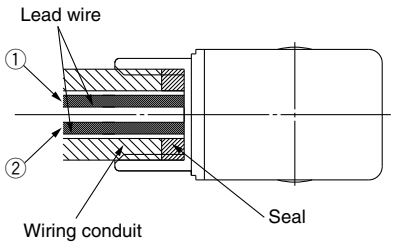

(Bore size G1/2 Tightening torque 0.37 to 0.44 lbf·ft [0.5 to 0.6 N·m])

Rated voltage	Lead wire color	
	①	②
DC	Black	Red
100 VAC	Blue	Blue
200 VAC	Red	Red
Other AC	Gray	Gray

∗ There is no polarity.

Description	Part no.
Seal	VCW20-15-6

Note) Please order separately.

Electrical Circuits

⚠ Caution

[DC circuit]

Grommet, Flat terminal

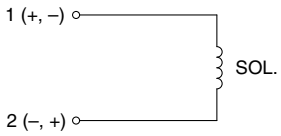

Without electrical option

Grommet, DIN terminal, Conduit terminal, Conduit

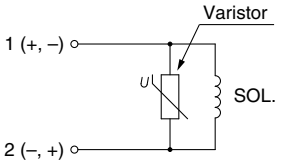

With surge voltage suppressor

DIN terminal, Conduit terminal

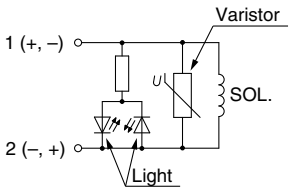

With light/surge voltage suppressor

[AC circuit]

∗ For AC (Class B), the standard product is equipped with surge voltage suppressor.

Grommet, DIN terminal, Conduit terminal, Conduit

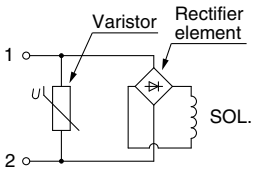

Without electrical option

DIN terminal, Conduit terminal

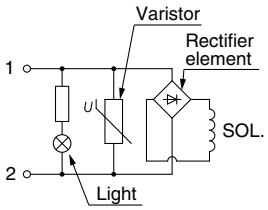

With light/surge voltage suppressor

One-touch Fitting

⚠ Caution

For information on handling One-touch fittings and appropriate tubing, refer to page 48 and the KQ2 series One-touch fittings in Best Pneumatics No. 6.
The KQ2 series information can be downloaded from the following SMC website, http://www.smcworld.com

⚠ Safety Instructions

These safety instructions are intended to prevent hazardous situations and/or equipment damage. These instructions indicate the level of potential hazard with the labels of **"Caution," "Warning"** or **"Danger."** They are all important notes for safety and must be followed in addition to International Standards (ISO/IEC)*1), and other safety regulations.

⚠ Caution: **Caution** indicates a hazard with a low level of risk which, if not avoided, could result in minor or moderate injury.

⚠ Warning: **Warning** indicates a hazard with a medium level of risk which, if not avoided, could result in death or serious injury.

⚠ Danger : **Danger** indicates a hazard with a high level of risk which, if not avoided, will result in death or serious injury.

*1) ISO 4414: Pneumatic fluid power – General rules relating to systems.
ISO 4413: Hydraulic fluid power – General rules relating to systems.
IEC 60204-1: Safety of machinery – Electrical equipment of machines. (Part 1: General requirements)
ISO 10218-1: Manipulating industrial robots – Safety.
etc.

⚠ Warning

1. **The compatibility of the product is the responsibility of the person who designs the equipment or decides its specifications.**
   Since the product specified here is used under various operating conditions, its compatibility with specific equipment must be decided by the person who designs the equipment or decides its specifications based on necessary analysis and test results. The expected performance and safety assurance of the equipment will be the responsibility of the person who has determined its compatibility with the product. This person should also continuously review all specifications of the product referring to its latest catalog information, with a view to giving due consideration to any possibility of equipment failure when configuring the equipment.
2. **Only personnel with appropriate training should operate machinery and equipment.**
   The product specified here may become unsafe if handled incorrectly. The assembly, operation and maintenance of machines or equipment including our products must be performed by an operator who is appropriately trained and experienced.
3. **Do not service or attempt to remove product and machinery/equipment until safety is confirmed.**
   1. The inspection and maintenance of machinery/equipment should only be performed after measures to prevent falling or runaway of the driven objects have been confirmed.
   2. When the product is to be removed, confirm that the safety measures as mentioned above are implemented and the power from any appropriate source is cut, and read and understand the specific product precautions of all relevant products carefully.
   3. Before machinery/equipment is restarted, take measures to prevent unexpected operation and malfunction.
4. **Contact SMC beforehand and take special consideration of safety measures if the product is to be used in any of the following conditions.**
   1. Conditions and environments outside of the given specifications, or use outdoors or in a place exposed to direct sunlight.
   2. Installation on equipment in conjunction with atomic energy, railways, air navigation, space, shipping, vehicles, military, medical treatment, combustion and recreation, or equipment in contact with food and beverages, emergency stop circuits, clutch and brake circuits in press applications, safety equipment or other applications unsuitable for the standard specifications described in the product catalog.
   3. An application which could have negative effects on people, property, or animals requiring special safety analysis.
   4. Use in an interlock circuit, which requires the provision of double interlock for possible failure by using a mechanical protective function, and periodical checks to confirm proper operation.

⚠ Caution

1. **The product is provided for use in manufacturing industries.**
   The product herein described is basically provided for peaceful use in manufacturing industries.
   If considering using the product in other industries, consult SMC beforehand and exchange specifications or a contract if necessary.
   If anything is unclear, contact your nearest sales branch.

Limited warranty and Disclaimer/ Compliance Requirements

The product used is subject to the following "Limited warranty and Disclaimer" and "Compliance Requirements".
Read and accept them before using the product.

Limited warranty and Disclaimer

1. The warranty period of the product is 1 year in service or 1.5 years after the product is delivered, whichever is first.*2)
   Also, the product may have specified durability, running distance or replacement parts. Please consult your nearest sales branch.
2. For any failure or damage reported within the warranty period which is clearly our responsibility, a replacement product or necessary parts will be provided.
   This limited warranty applies only to our product independently, and not to any other damage incurred due to the failure of the product.
3. Prior to using SMC products, please read and understand the warranty terms and disclaimers noted in the specified catalog for the particular products.

   ***2) Vacuum pads are excluded from this 1 year warranty.**
   A vacuum pad is a consumable part, so it is warranted for a year after it is delivered.
   Also, even within the warranty period, the wear of a product due to the use of the vacuum pad or failure due to the deterioration of rubber material are not covered by the limited warranty.

Compliance Requirements

1. The use of SMC products with production equipment for the manufacture of weapons of mass destruction (WMD) or any other weapon is strictly prohibited.
2. The exports of SMC products or technology from one country to another are governed by the relevant security laws and regulations of the countries involved in the transaction. Prior to the shipment of a SMC product to another country, assure that all local rules governing that export are known and followed.

⚠ Caution

SMC products are not intended for use as instruments for legal metrology.
Measurement instruments that SMC manufactures or sells have not been qualified by type approval tests relevant to the metrology (measurement) laws of each country. Therefore, SMC products cannot be used for business or certification ordained by the metrology (measurement) laws of each country.

Revision history

Edition B
- Added N.O. valve.
- Added steam as a fluid (Insulation type Class H).
- Added manifold.
- Increased pages from 32 to 48.

QV

Edition C
- Added installation options.
- Added disassembly/assembly procedures.
- Leakage voltage (AC coil) was corrected from 10% or less to 5% or less.
- Increased pages from 48 to 52.

RX

Edition D
- Faston terminal is changed to flat terminal.
- Added UL-compliant (For Air/Water).
- Increased pages from 52 to 56.

SZ

⚠ Safety Instructions Be sure to read "Handling Precautions for SMC Products" (M-E03-3) before using.

Global Manufacturing, Distribution and Service Network

Worldwide Subsidiaries

EUROPE

AUSTRIA
SMC Pneumatik GmbH (Austria)
BELGIUM
SMC Pneumatics N.V./S.A.
BULGARIA
SMC Industrial Automation Bulgaria EOOD
CROATIA
SMC Industrijska Automatika d.o.o.
CZECH
SMC Industrial Automation CZ s.r.o.
DENMARK
SMC Pneumatik A/S
ESTONIA
SMC Pneumatics Estonia
FINLAND
SMC Pneumatics Finland OY
FRANCE
SMC Pneumatique S.A.
GERMANY
SMC Pneumatik GmbH
GREECE
SMC Hellas EPE
HUNGARY
SMC Hungary Ipari Automatizálási Kft.
IRELAND
SMC Pneumatics (Ireland) Ltd.
ITALY
SMC Italia S.p.A.
LATVIA
SMC Pneumatics Latvia SIA
LITHUANIA
SMC Pneumatics Lietuva, UAB
NETHERLANDS
SMC Pneumatics BV
NORWAY
SMC Pneumatics Norway A/S
POLAND
SMC Industrial Automation Polska Sp.z.o.o.
ROMANIA
SMC Romania S.r.l.
RUSSIA
SMC Pneumatik LLC.
SLOVAKIA
SMC Priemyselná Automatizáciá, s.r.o.
SLOVENIA
SMC Industrijska Avtomatika d.o.o.
SPAIN / PORTUGAL
SMC España, S.A.
SWEDEN
SMC Pneumatics Sweden AB
SWITZERLAND
SMC Pneumatik AG
UK
SMC Pneumatics (U.K.) Ltd.

ASIA

CHINA
SMC (China) Co., Ltd.
HONG KONG
SMC Pneumatics (Hong kong) Ltd.
INDIA
SMC Pneumatics (India) Pvt. Ltd.
JAPAN
SMC Corporation
MALAYSIA
SMC Pneumatics (S.E.A.) Sdn. Bhd.
PHILIPPINES
SMC Pneumatics (Philippines), Inc.
SINGAPORE
SMC Pneumatics (S.E.A.) Pte. Ltd.
SOUTH KOREA
SMC Pneumatics Korea Co., Ltd.
TAIWAN
SMC Pneumatics (Taiwan) Co., Ltd.
THAILAND
SMC Thailand Ltd.

NORTH AMERICA

CANADA
SMC Pneumatics (Canada) Ltd.
MEXICO
SMC Corporation (Mexico) S.A. DE C.V.
USA
SMC Corporation of America

SOUTH AMERICA

ARGENTINA
SMC Argentina S.A.
BOLIVIA
SMC Pneumatics Bolivia S.R.L.
BRAZIL
SMC Pneumaticos do Brazil Ltda.
CHILE
SMC Pneumatics (Chile) S.A.
PERU
SMC Corporation Peru S.A.C.
VENEZUELA
SMC Neumatica Venezuela S.A.

OCEANIA

AUSTRALIA
SMC Pneumatics (Australia) Pty. Ltd.
NEW ZEALAND
SMC Pneumatics (N.Z.) Ltd.

U.S. & Canadian Sales Offices

WEST
- Austin
- Dallas
- Los Angeles
- Phoenix
- Portland
- San Francisco

CENTRAL
- Chicago
- Cincinnati
- Cleveland
- Detroit
- Indianapolis
- Milwaukee
- Minneapolis
- St. Louis

EAST
- Atlanta
- Birmingham
- Boston
- Charlotte
- Nashville
- New Jersey
- Rochester
- Tampa

CANADA
- Vancouver
- Toronto
- Windsor
- Montreal

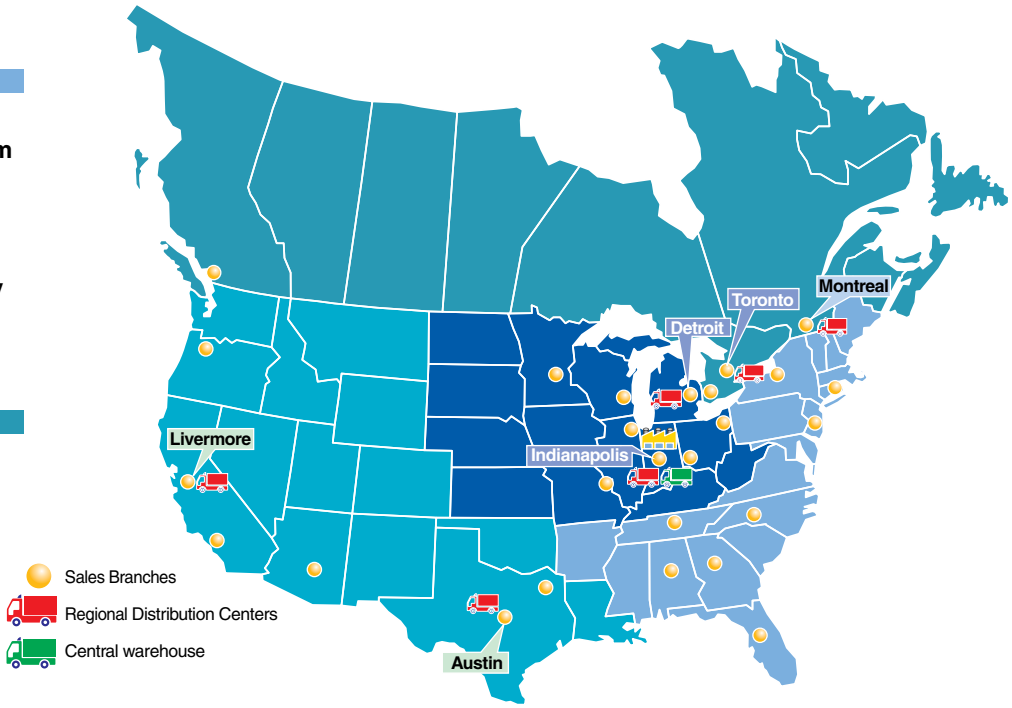

SMC Corporation of America
10100 SMC Blvd., Noblesville, IN 46060
www.smcusa.com

SMC Pneumatics (Canada) Ltd.
www.smcpneumatics.ca

(800) SMC.SMC1 (762-7621)
e-mail: **sales@smcusa.com**
International inquiries: **www.smcworld.com**

© 2015 SMC Corporation of America, All Rights Reserved.
All reasonable efforts to ensure the accuracy of the information detailed in this catalog were made at the time of publishing.
However, SMC can in no way warrant the information herein contained as specifications are subject to change without notice.

TQ-RRD-5M