| MODEL NO. | "L" | P/N |
|---|---|---|
| PIT433U | 10058 [396] | 70777 |
| PIT43U | 1000 [39] | 48006 |
| PIT4100U | 30480 [1200] | 70778 |
| PIT475U | 22860 [900] | 40400 |
| PIT460U | 18288 [720] | 27280 |
| PIT430U | 9144 [360] | 27149 |
| PIT420U | 6096 [240] | 27555 |
| PIT415U | 4572 [180] | 27148 |
| PIT410U | 3048 [120] | 27556 |
| PIT46U | 2000 [79] | 26034 |

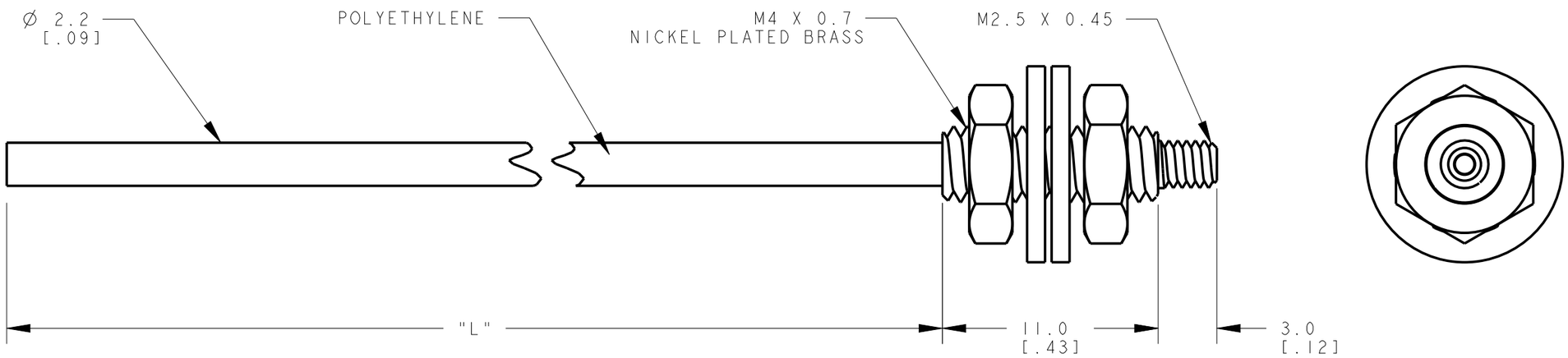


| | | |
|---|---|---|
| B | RE-DRAWN IN SOLIDWORKS | 4-26-02 G. GIBBONS |
| A | SMALL THREAD WAS LISTED AS M2 X 0.45 | 8-23-95 GRK |

This drawing is the property of BANNER ENGINEERING CORP. Any use or reproduction, in any form, without prior written permission of Banner is prohibited.
© 2015 Banner Engineering Corp.

THIRD ANGLE PROJECTION

BANNER ENGINEERING CORP.
www.bannerengineering.com

TITLE

**PIT4 SERIES UNTERMINATED**

| SIZE | DRAWING NO. | REV. |
|---|---|---|
| B | 161890 | A |

SCALE 4:1 | SHEET 1 OF 1

NOTES:
1. ALL DIMENSIONS ARE MILLIMETERS [INCHES] UNLESS OTHERWISE NOTED.
2. REFER TO "www.bannerengineering.com" FOR ADDITIONAL DATA AND SPECIFICATIONS.

CREO