Monitoring Relays
1-Phase AC Over Current
Type DIA53

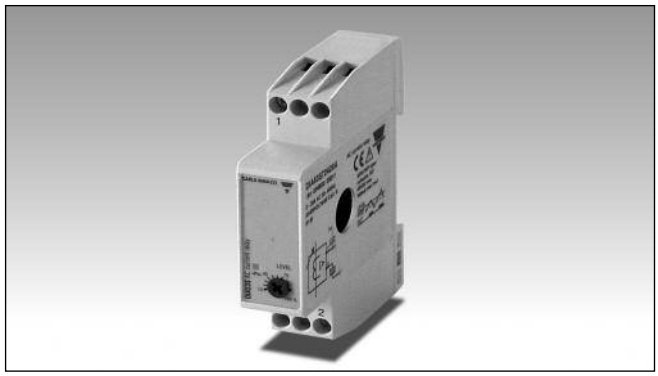

- **2-wire connection**
- **Self-powered**
- **Input ranges: 2 - 20 AAC, 5 - 50 AAC or 10 - 100 AAC**
- **Knob-adjustable set-point**
- **Output: Normally open, 100 mA**
- **LED indication for output ON**
- **For mounting on DIN-rail in accordance with DIN/EN 50 022**
- **17.5 mm DIN-rail housing (DIN 43880)**

Product Description

Small current monitoring relay with built-in current transformer with adjustable set-point and integrated solid state output. Self-powered and 2-wire connection for easy use.

12 mm hole for insulated current carrying wire makes it suitable for most applications. For mounting on DIN-rail. 17.5 mm wide housing suitable both for back and front panel mounting.

Ordering Key

DIA 53 S 724 20A F

- **Housing**
- **Function**
- **Type**
- **Item number**
- **Output**
- **Power supply**
- **Input range**
- **Version**

Type Selection

Input current	Reaction time	Type no.
2 - 20 AAC	Standard	**DIA53 S724 20A**
5 - 50 AAC	Standard	**DIA53 S724 50A**
10 - 100 AAC	Standard	**DIA53 S724 100A**
2 - 20 AAC	Fast	**DIA53 S724 20A F**
5 - 50 AAC	Fast	**DIA53 S724 50A F**
10 - 100 AAC	Fast	**DIA53 S724 100A F**

Output Specifications

Output	NPN-PNP open collector, NO
Output current Maximum load current	100 mA
Leakage current	≤ 100 µA
Max. voltage	40 VDC
Voltage drop (U_d)	< 2.5 VDC

Input Specifications

	DIA53 S 724 20A	DIA53 S 724 50A	DIA53 S 724 100A
Current range	2 - 20 AAC @ 50 Hz	5 - 50 AAC @ 50 Hz	10 - 100 AAC @ 50 Hz
Max. current (continuously)	40 AAC	100 AAC	150 AAC
Max. overload current (t = 30 s)	200 AAC	200 AAC	200 AAC

General Specifications

Reaction time	
DIA53	< 300 ms (input signal variation from -20% to +20% of set value)
DIA53...F	< 50 ms (input signal variation from -20% to +20% of set value)
Repeatability	0.5 %
Hysteresis (Differential travel)	7 - 13% of setpoint
Frequency range	45 - 400 Hz
Temperature variation	±0.20%/°C of setpoint
Environment	
Degree of protection	IP 20
Pollution degree	3
Operating temperature	-20 to +60°C
Weight	80 g
Screw terminals	
Tightening torque	Max. 0.5 Nm acc. to IEC 60947
Housing	
Dimensions	17.5 x 81 x 67.2 mm
Material	PA66 or Noryl
Product standard	EN 60255-6
Approval	UL, CSA
CE Marking	L.V. Directive 2006/95/EC EMC Directive 2004/108/EC
EMC	
Immunity	According to EN 60255-26 According to EN 61000-6-2
Emissions	According to EN 60255-26 According to EN 61000-6-3

Wiring Diagrams

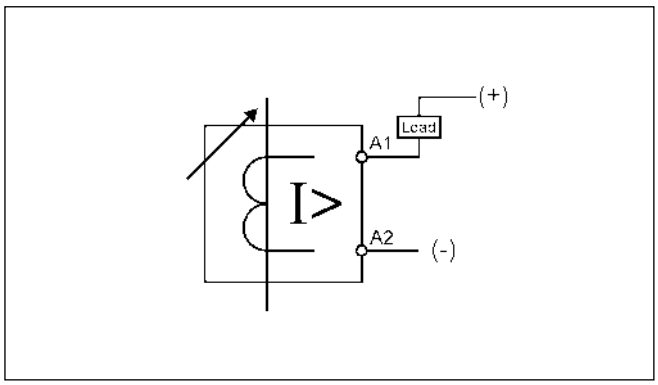

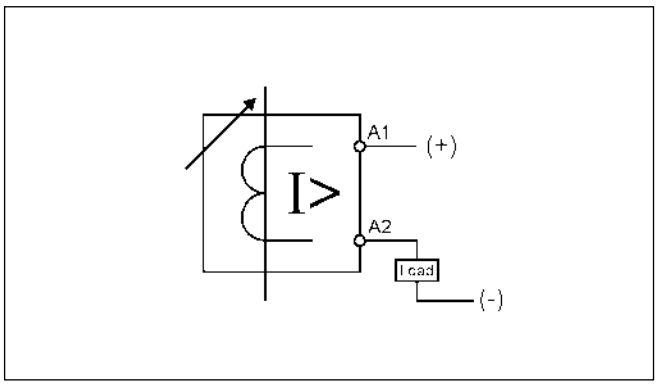

Operation Diagram

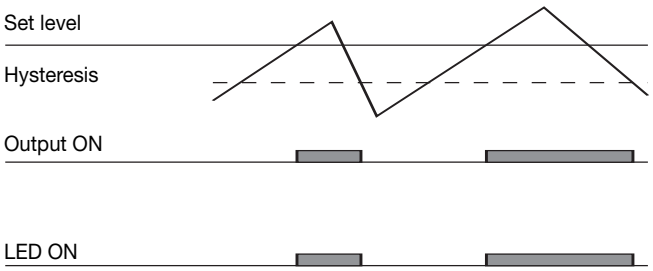

Dimensions

